COUNTY OF CLEVELAND, NORTH CAROLINA

AGENDA FOR THE PLANNING BOARD MEETING

April 24, 2018

6:00 PM

County Commissioners Chamber

Call to order and Establishment of a Quorum

Invocation and Pledge of Allegiance

Approval of Minutes

Approval of Minutes from the 3-27-18 Planning Board Meeting

Cases

Road Renaming Case 18-02: Request to rename Carriage Court North to Carriage Run

Case 18-06: Request to rezone property at 156-3 Pete Mauney Road from Residential to Neighborhood Business Conditional District

Case 18-07: Request to rezone property at 133 Daves Road from Residential to Neighborhood Business Conditional District

Case 18-08: Request to rezone property at 905 Cleveland Avenue from Restricted Residential to Residential

Case 18-09: Request to rezone property at 3711 Lavista Drive from Residential to General Business

Miscellaneous Business

Boiling Springs Community Park Revitalization

Discussion of May 1, 2018 School of Government Planning Board Class in Charlotte

Adjournment

COUNTY OF CLEVELAND, NORTH CAROLINA

AGENDA ITEM SUMMARY

Minutes

Department:

Agenda Title: Approval of Minutes from the 3-27-18 Planning Board Meeting

Agenda Summary:

Proposed Action:

ATTACHMENTS:

File Name	Description
03-27-18_PB_Minutes.pdf	Minutes

CLEVELAND COUNTY PLANNING BOARD
Cleveland County Administrative Building – Commission Chambers
311 E. Marion Street, Shelby, NC
March 27, 2018 - 6:00 p.m.

Present:	**Absent:**	**Others**
Max Hopper, Chairman	Lucas Shires	Chris Martin, Senior Planner
Tom Spurling, Vice-Chairman		Henry Earle, County Planner
Charles Christenbury		Anna Parker, Admin. Assistant
Darryl Crawford		
Ronnie Whetstine		
Susan Scruggs		

CALL TO ORDER

Chairman Max Hopper called the meeting to order at 6:02 pm.

INVOCATION, PLEDGE OF ALLEGIANCE, AND ESTABLISH QUORUM

Tom Spurling led the Pledge of Allegiance, followed by the invocation. It was determined that a quorum was present.

APPROVAL OF FEBRUARY 27, 2018 MINUTES

Tom Spurling made a motion to approve the 02-27-2018 minutes. It was seconded by Charles Christenbury and unanimously carried.

RE-ZONE CASE 18-05: HI TO GB

Petitioner: Betty Carrigan
Location: 5110 E. Dixon Blvd.

Henry Earle presented the property owners' request to re-zone from Heavy Industrial to General Business. The property is owned by Charles and Betty Carrigan and it is one acre. There is a General Business node designated on the Land Use Plan to the west at Bethlehem Rd. If this property is rezoned, the Land Use Plan will need to be amended to create a business node for this area. Strategy C-A1 of the Land Use Plan encourages business nodes in Heavy Industrial areas, especially close to existing business nodes and along thoroughfares. If the Land Use Plan is amended to add a business node, the node can be limited to just the surrounding area, or be created along the Hwy. 74 corridor to for an extended length along the highway. This location of 5110 E. Dixon Blvd. is currently in the Corridor Protection overlay district and there are business uses nearby, so this this request would not necessarily be considered spot zoning. This property and its surrounding properties along the highway side are currently being used for business purposes. The property to the rear of this site is being used for an auto wholesale business, which is allowed in Heavy Industrial, not General Business. There are approximately 80 acres of

surrounding property zoned as Heavy Industrial in this area, all of which is owned by the Carrigans and their family members.

Chairman Hopper pointed out that this may come up again for this area. This area will also be affected by the 74 bypass. He felt that extending the node along Hwy. 74 would be better than just having a small business node just around this one site.

Mr. Martin stated that there are several existing business nodes that are expanded to follow a highway. Mr. Earle stated that business nodes do not follow parcel lines; it is more an arbitrary line or suggestion that covers a general area.

Tom Spurling pointed out that the node is not a zoning change; it *does* lend credence to future rezoning decisions by making it in conjunction with the Land Use Plan.

Mr. Whetstine inquired if a node extending along Hwy. 74 from Buffalo Creek to the Kings Mountain ETJ would be acceptable and Staff said that it would be.

Chairman Hopper requested a recess at 6:25 pm and resumed the meeting at 6:30 pm. He then entertained a motion from the Board, since there was no public present for comment.

Charles Christenbury made the motion to recommend the approval of adding a business node to the Land Use Plan on Hwy. 74 that extends from the Shelby ETJ to the Kings Mountain ETJ, and to recommend accepting the rezoning request from Heavy Industrial to General Business. **Darryl Crawford** seconded the motion and it unanimously carried.

RE-ZONE CASE 18-04: RA-CD to R
Petitioner: Bank of the Ozarks
Location: 2617 Royster Rd.

Chris Martin reviewed Bank of the Ozark's request to re-zone from Rural Agriculture-Conditional District to Residential. The property was re-zoned in 2006 from Residential to Rural Agriculture-Conditional District for use of a motorcycle repair shop only. This property is now owned by Bank of the Ozarks and they want to re-zone it for residential use. This property is surrounded by residential zoning and is used for residential and rural agriculture. The Land Use Plan calls for the area to be residential so the map would not need to be amended.

Chairman Hopper opened and closed the public comment period as there was no public present to comment. He entertained a motion from the Board.

Susan Scruggs made the motion to recommend changing the property back to Residential Zoning to make it in compliance with the Land Use Plan. Tom Spurling seconded the motion and it unanimously carried.

ROAD NAMING REQUEST 18-01: BILL'S CREEK LANE
Petitioner: Jean White
Location: On Bethlehem Rd. between Prim Ln. and Detter Ln.

Chris Martin stated that this road serves several properties for new homes going in. E-911 Services supports the name.

Mr. Whetstine inquired about his work building one of the property owner's homes (the petitioner's sister) on this new road to see if it would be an issue or conflict. Chairman Hopper felt that it would not, since the Board is only voting on a road name.

Chairman Hopper opened the Public Hearing at 6:40pm. There was no public present and he closed the public hearing at 6:41 pm.

Charles Christenbury made the motion to accept the new road name Bill's Creek Lane. Susan Scruggs seconded the motion and it unanimously carried.

MISCELLANEOUS BUSINESS

- **Land Use Plan Update**

Chairman Hopper asked Staff about the Land Use Plan audit. Mr. Martin said he did relay the Board's recommendation to the Managers and Commissioners Chairman. They are trying to work the audit and the cost of a full plan into the budget. The Planning Board pointed out many gray areas in the current plan and areas that could be looked into as the County grows, such as mixed use zoning. This is not address in the current plan at all. Mr. Spurling pointed out that there is a sense of urgency.

The Board is in unanimous consensus for quick and complete action to bring the Land Use Plan up to date so the County can be ready for opportunities and growth brought before us, and requested Staff relay this report.

- **Training**

The Planning Board Training Date will be Tuesday May 1st in Charlotte from 1:00 pm to 4:00 pm. Staff will e-mail details to the participants.

ADJOURNMENT

There being no further business, **Chairman Hopper** adjourned the meeting at 6:54 pm.

ATTEST:

_____ _____

Max Hopper, Chairman Anna Parker, Administrative Assistant

COUNTY OF CLEVELAND, NORTH CAROLINA

AGENDA ITEM SUMMARY

Road Renaming Case 18-02

Department:

Agenda Title: Road Renaming Case 18-02: Request to rename Carriage Court North to Carriage Run

Agenda Summary:

Proposed Action:

ATTACHMENTS:

File Name	Description
Aerial_Map.pdf	Aerial Map

Road Renaming Case 18-02: Carriage Court North to Carriage Run

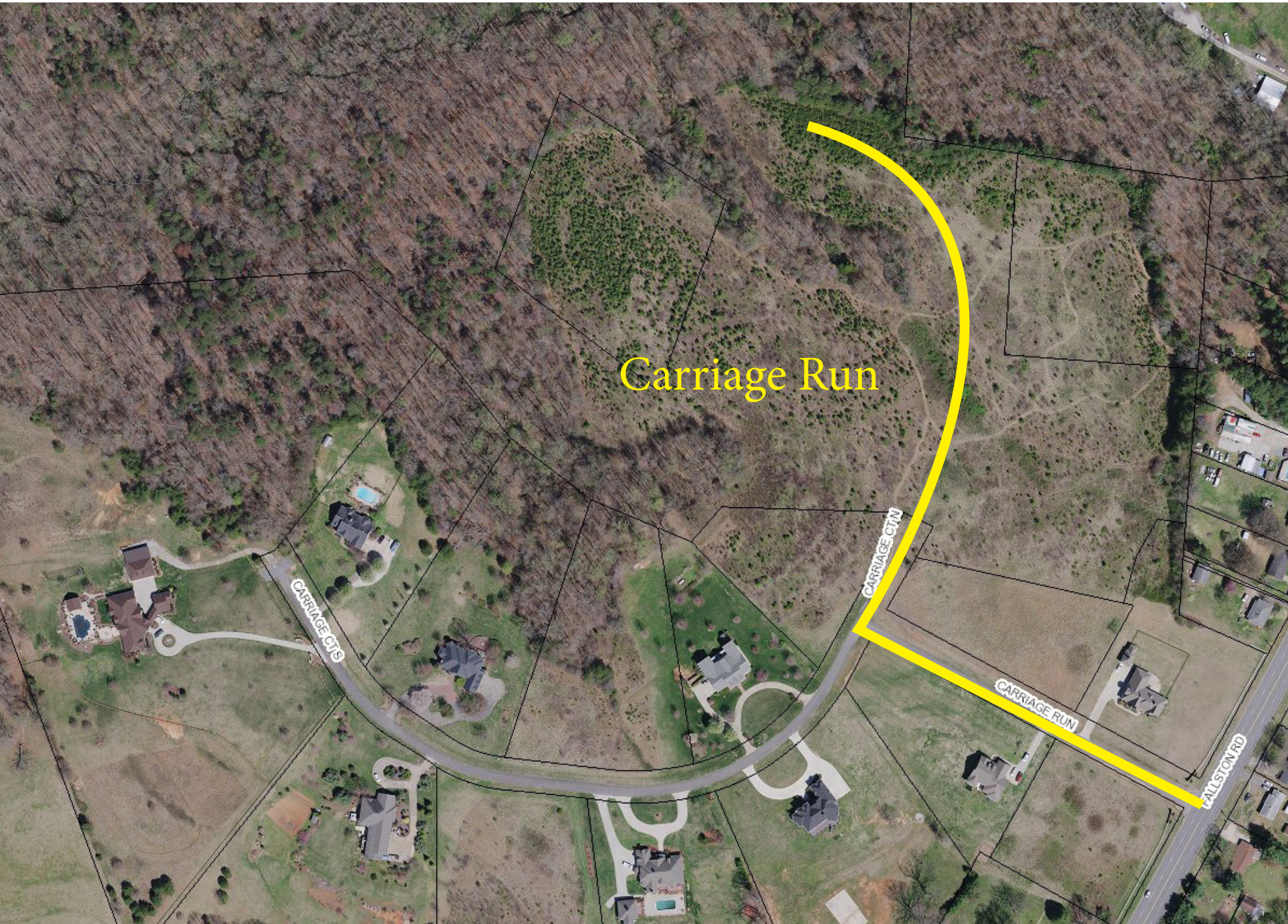

COUNTY OF CLEVELAND, NORTH CAROLINA

AGENDA ITEM SUMMARY

Case 18-06

Department:

Agenda Title: Case 18-06: Request to rezone property at 156-3 Pete Mauney Road from Residential to Neighborhood Business Conditional District

Agenda Summary:

Proposed Action:

ATTACHMENTS:

	File Name	Description
☐	18-06_Staff_Report_156_Pete_Mauney_Road.pdf	Staff Report
☐	18-06_tower_site_Map.pdf	Maps
☐	18-06_Pete_mauney_cell_VZW_Belwood_Preliminary_CDs_Rev._D__12.5.17.pdf	Site Plan
☐	Site_Plan_with_Fall_Zones.pdf	Site Plan with Fall Zones

STAFF REPORT

To: Belwood Town Council Date: April 11, 2018

From: Chris Martin, Senior Planner

Subject: Rezoning Case 18-06

Summary Statement: Chris Kinchen, with Faulk & Foster Real Estate, is requesting on behalf of Verizon Wireless to rezone a 100' by 100' portion of Parcel #41652 at 156 Pete Mauney Road, Residential (R) to Neighborhood Business Conditional District (NB-CD) for the purpose of placing a telecommunication tower on the property.

Review: Faulk & Foster has found a parcel of land that they wish to use for a telecommunication tower. Their stated purpose for this parcel is that there is poor cell phone strength in portions of the northern end of the County. Telecommunication towers are currently allowed in the Neighborhood Business, General Business, Light Industrial and Heavy Industrial zones. This parcel is currently zoned residential, as are surrounding parcels. To the east along Fallston Road there is some General Business zoned property. Neighborhood Business allows both residential and business uses that serve the surrounding community, as defined by our Code. The Land Use Plan calls the area Future Rural Residential. A site plan has been submitted giving the metes and bounds of the lessee area requested for rezoning.

Per North Carolina General Statute 153A-341 the Council is required to craft a plan consistency statement giving explanation as to the Council's decision and how it relates to the land use plan utilizing one of the three below:

- A statement approving the proposed zoning amendment and describing its consistency with the Land Use Plan;
- A statement rejecting the proposed zoning amendment and describing its inconsistency with the Plan; or
- A statement approving the proposed amendment and declaring that this also amends the Plan, along with an explanation of the change in conditions to meet the development needs of the community that were taken into account in the zoning amendment.

Pros:

- The Neighborhood Business Zoning District is consistent in use with the Land Use Plan designation of Residential.
- A telecommunication tower will benefit the surrounding community by creating greater cell signal to residents in the Belwood area.

Cons:

- None

Recommendations:

- Planning Board: Planning Board will meet on 4/24/18.

Case # 18-06 Re-Zoning for 156 Pete Mauney Road, R to NB-CD
Current Zoning Designation, Parcel #41652, 73.38 acres

Restricted Residential Residential General Business

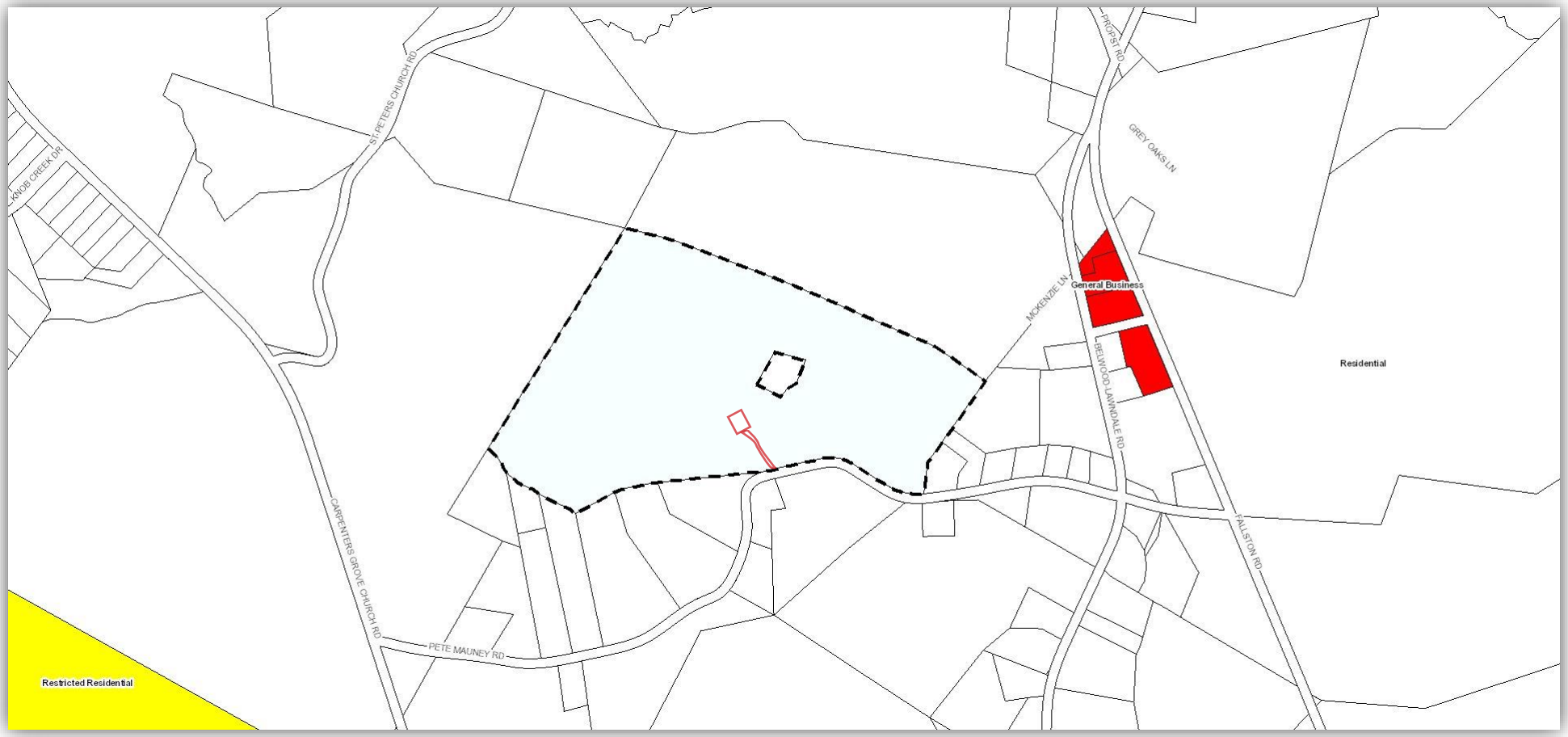

Case # 18-06 Re-Zoning for 156 Pete Mauney Road, R to NB-CD
Future Land Use Map, Parcel #41652, 73.38 acres

Industrial Residential Municipal

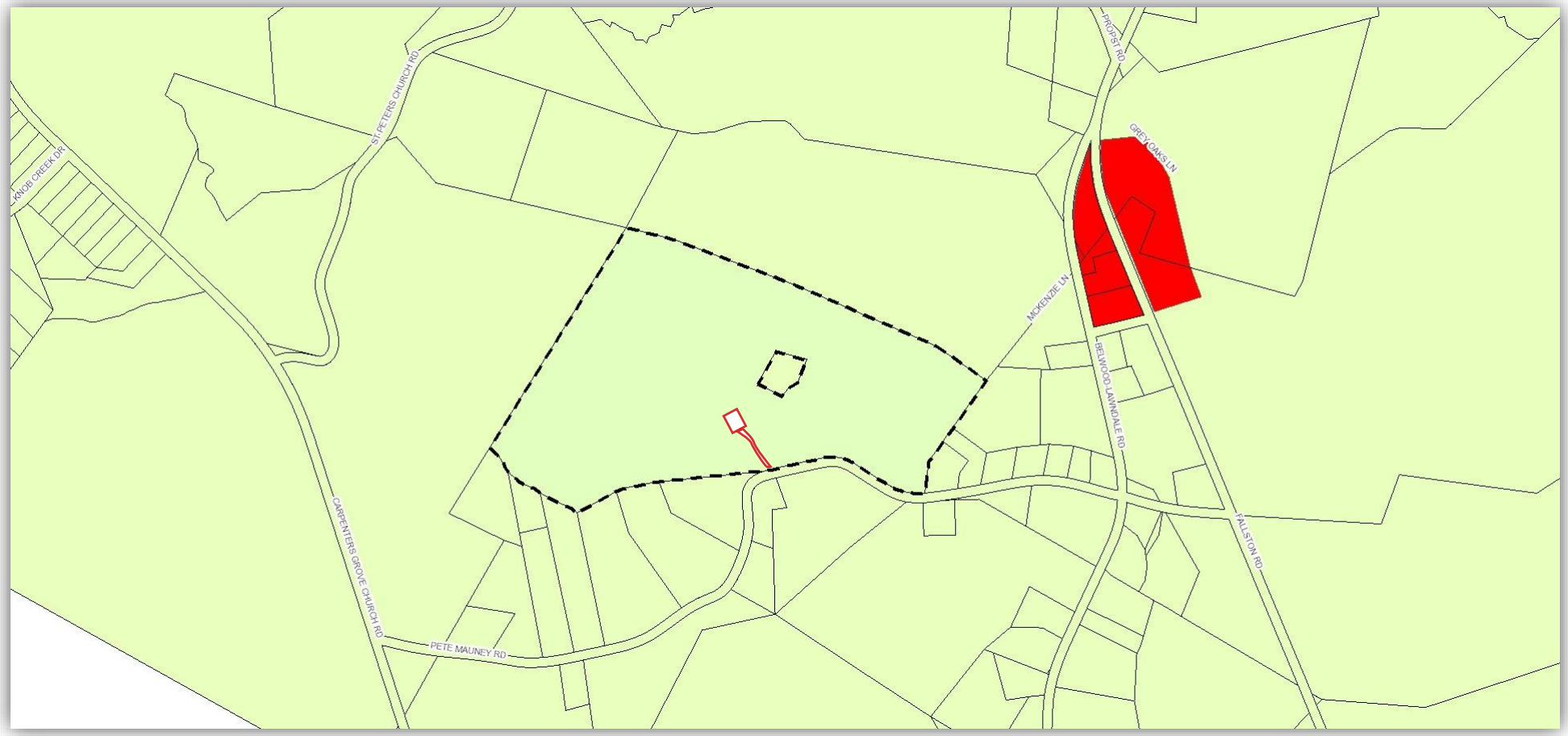

Case # 18-06 Re-Zoning for 156 Pete Mauney Road, R to NB-CD
Aerial Map, Parcel #41652, 73.38 acres

PROJECT SUMMARY

SITE NAME:	BELWOOD
SITE NUMBER:	443107
PROJECT NUMBER:	20171560879
SITE ADDRESS: (E911 VERIFIED)	156 PETE MAUNEY ROAD LAWNDALE, NC 28090
JURISDICTION:	CLEVELAND COUNTY
COUNTY:	CLEVELAND COUNTY
TOWER OWNER:	VERIZON WIRELESS NORTH CAROLINA 8921 RESEARCH DRIVE CHARLOTTE, NC 28262
BRETT SLOUGH (VERIZON CONSTRUCTION)	(919) 218-9950
SITE COORDINATES:	1A
LATITUDE: LONGITUDE: ELEVATION:	35° 29' 26.77" N (NAD 83) 81° 31' 43.43" W (NAD 83) 1004.5' (NAVD 88)
FLOOD ZONE:	ZONE "X"
OCCUPANCY:	UNMANNED
CONSTRUCTION TYPE:	RAWLAND
TELEPHONE COMPANY:	AT&T CONTACT: TBD PHONE: (800) 721-7811
POWER COMPANY:	DUKE ENERGY CONTACT: TBD PHONE: (704) 471-5300
FIRE DEPARTMENT:	FALLSTON FIRE DEPARTMENT PHONE: (704) 538-7725
POLICE DEPARTMENT:	CLEVELAND COUNTY SHERIFFS DEPARTMENT PHONE: (704) 484-4888
E911 ADDRESSING:	CLEVELAND COUNTY ADDRESSING CONTACT: CHRIS MARTIN PHONE: (704) 489-4979
ZONING PROCESS:	FULL ZONING
BUILDING PERMIT PROCESS:	TBD

STATE COUNTY MAP

NORTH CAROLINA

verizon

8921 RESEARCH DRIVE
CHARLOTTE, NC 28262
ATTN: BRETT SLOUGH - (919) 218-9950

SITE NAME: BELWOOD
156 PETE MAUNEY ROAD
LAWNDALE, NC 28090

VICINITY MAP

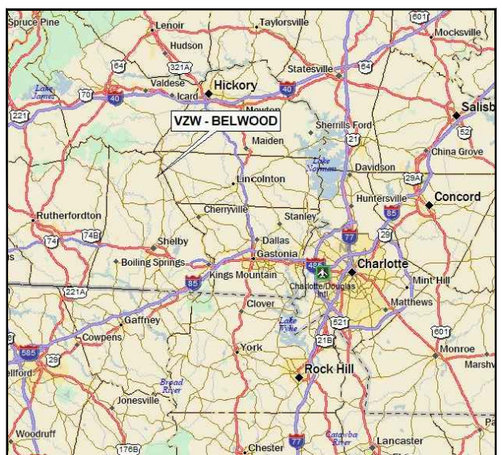

NOT TO SCALE

LOCATION MAP

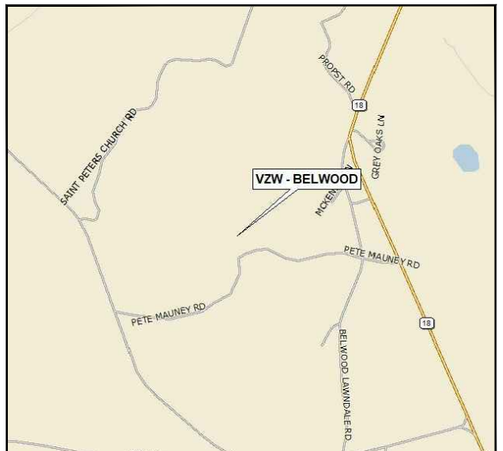

NOT TO SCALE

DRIVING DIRECTIONS

FROM VERIZON OFFICE, CHARLOTTE, NC:

HEAD SOUTHWEST ON RESEARCH DR. TURN LEFT ONTO W WT HARRIS BLVD. TURN RIGHT ONTO THE INTERSTATE 85 S RAMP. MERGE ONTO I-85 S. TAKE EXIT 14 FOR NC-274 N. TURN LEFT ONTO NC-274 N/BESSEMER CITY RD. CONTINUE TO FOLLOW NC-274 N. TURN RIGHT ONTO 1448/E MAINE AVE. CONTINUE TO FOLLOW E MAINE AVE. TURN RIGHT ONTO NC-274 N/N 14TH ST. CONTINUE TO FOLLOW NC-274 N. TURN LEFT ONTO FLAY RD. SLIGHT LEFT TO STAY ON FLAY RD. CONTINUE ONTO KADESH CHURCH RD. TURN RIGHT ONTO FALLSTON RD. TURN LEFT ONTO PETE MAUNEY RD.

SHEET SCALE FACTOR:

PLOT SIZE:
11"x17": "TO SCALE"
24"x36": 2X SCALE AS NOTED

1 (800) 632-4949
www.nc811.com
CONTRACTOR TO CALL NORTH CAROLINA ONE-CALL SYSTEMS AT LEAST (2) WORKING DAYS PRIOR TO DIGGING.

SHEET INDEX

NO.	DESCRIPTION
T1	TITLE SHEET
LS1	LAND SURVEY
LS2	LAND SURVEY
LS3	LAND SURVEY
LS4	LAND SURVEY
GN1	GENERAL NOTES
C1	OVERALL SITE LAYOUT PLAN
C2	SITE LAYOUT PLAN
C2A	ENLARGED LAYOUT PLAN
C2B	EQUIPMENT LAYOUT PLAN
C3	SITE DETAILS
C3A	SITE DETAILS
C3B	SITE DETAILS
C4	SITE DETAILS
C4A	SITE DETAILS
C5	SITE DETAILS
C5A	SITE DETAILS
C5B	SITE DETAILS
C5C	SITE DETAILS
C6	FENCE DETAILS
L1	LANDSCAPE PLAN
L2	LANDSCAPE DETAILS
E1	ELECTRICAL SITE PLAN
E2	SITE GROUNDING PLAN
E2A	EQUIPMENT GROUNDING PLAN
E2B	GROUNDING NOTES
E3	ELECTRICAL SPECIFICATIONS
E4	ELECTRICAL DETAILS
E5	ELECTRICAL DETAILS
E6	ELECTRICAL DETAILS
E6A	ELECTRICAL DETAILS
E6B	ELECTRICAL DETAILS
E7	SINGLE LINE DIAGRAM
E8	ELECTRICAL DETAILS
E9	GROUNDING SINGLE LINE

LESSEE

TeleCAD Wireless
1961 NORTHPOINT BLVD, SUITE 130
HIXSON, TN 37343
PH: 423-843-9500
FAX: 423-843-9509

THE INFORMATION CONTAINED IN THIS SET OF DOCUMENTS IS PROPRIETARY BY NATURE. ANY USE OR DISCLOSURE OTHER THAN THAT WHICH RELATES TO THE CLIENT IS STRICTLY PROHIBITED.

A&E PROJECT #:	20171560879
DRAWN BY:	JSJ
CHECKED BY:	DMB

REVISIONS

NO.	DATE	BY	DESCRIPTION
D	12/5/17	CAD	PRELIMINARY REVIEW
C	11/22/17	CAD	PRELIMINARY REVIEW
B	11/01/17	CAD	PRELIMINARY REVIEW
A	08/29/17	JSJ	PRELIMINARY REVIEW

PROJECT No.
20171560879

SITE NAME:
BELWOOD

SITE NUMBER:
443107

SITE ADDRESS:
156 PETE MAUNEY ROAD
LAWNDALE, NC 28090

DESIGN TYPE:
RAWLAND

SHEET TITLE:
TITLE SHEET

DRAWING NO.
T1

REVISION:
D

NORTH ORIENTATION

NORTH CAROLINA STATE PLANE COORDINATE SYSTEM
Based on GPS Survey relative to NGS CORS Network

Grid to True North Convergence: 1° 27' 34"
Combined GPS Scale Factor: 1.00016681
Magnetic Declination 7° 20' W ± 21'

PROPOSED TOWER DATA

CENTER OF TOWER (NAD 83)
LATITUDE: 35° 29' 26.77" NORTH
LONGITUDE: 81° 31' 43.43" WEST

GROUND ELEVATION: 1,004.5 FEET
AMSL, NAVD88, Based on GPS Survey
CORS Benchmark: DG7404 NCSH

SITE LOCATION

SITE ADDRESS
156 Pete Mauney Road,
Lawndale, NC 28090

VICINITY MAP

NOT TO SCALE

CORDELL
LAND SURVEYING
2857 Camp Creek Road,
Murphy, NC 28906
(828) 494-7058

PREPARED FOR
verizon
CELLCO PARTNERSHIP
D/B/A Verizon Wireless

SURVEYOR'S CERTIFICATION:

SURVEYOR'S CERTIFICATION:

To Cellco Partnership, d/b/a Verizon Wireless and Clark Law, P.C.:

This is to certify that this map or plat and the survey on which it is based were made in accordance with "Minimum Standard Detail Requirements for ALTA/NSPS Land Title Surveys," jointly established and adopted by ALTA, and NSPS. Pursuant to the Accuracy Standards as adopted by ALTA and NSPS and in effect on the date of this certification, undersigned further certifies that;

* the survey measurements were made in accordance with the "Minimum Angle, Distance, and Closure Requirements for Survey Measurements Which Control Land Boundaries for ALTA/NSPS Land Title Surveys."

NORTH CAROLINA PROFESSIONAL SEAL L-3037 LAND SURVEYOR DONALD L. CORDELL

Donald Cordell,
North Carolina License No. 3037

SURVEYOR'S NOTES:

1. This is a Rawland Tower Survey, made on the ground under the supervision of a Registered Land Surveyor. Date of field survey is June 28, 2017.
2. Instruments Used: Topcon GTS 212 and Prism, Topcon Hiperlite Plus GPS, TDS Nomad and/or Carlson Surveyor Data Collector.
3. Surveyor hereby states the Geodetic Coordinates and the elevation shown for the proposed centerline of the tower are accurate to within +/– 15 feet horizontally and to within +/– 3 feet vertically (FAA Accuracy Code 1A).
4. Survey shown hereon conforms to the Minimum Requirements as set forth by the State Board for a Category "II" Survey: Field data upon which this map or plat is based has a closure precision of not less than one–foot in 7,500 feet (1:7,500) and an angular error that does not exceed 15 seconds times the square root of the number of angles turned. Field traverse did not require adjustment.
5. Benchmark used is a Continuously Operating Reference Station (CORS) as noted hereon. Onsite benchmark is as shown hereon. Elevations shown are in US Survey Feet and refer to NAVD 88.
6. No underground utilities, underground encroachments or building foundations were measured or located as a part of this survey, unless otherwise shown. Trees and shrubs not located, unless otherwise shown.
7. This survey was conducted for the purpose of a Rawland Tower Survey only, and is not intended to delineate the regulatory jurisdiction of any federal, state, regional or local agency, board, commission or other similar entity.
8. Attention is directed to the fact that this survey may have been reduced or enlarged in size due to reproduction. This should be taken into consideration when obtaining scaled data.
9. This survey is not valid without the original signature and the original seal of a State–Licensed Land Surveyor.
10. This survey does not constitute a complete boundary survey of the Parent Tract, or adjoining Parcels.
11. This Survey was conducted with the benefit of a Title Examination, see Sheet #2.

FLOOD NOTES:

By graphic plotting only, Lessee's Land Space & Access & Utility R/W appear to lie within ZONE "X" per F.E.M.A Flood Insurance Rate Map Community Panel No. 3710264400K, dated Feb. 20, 2008.

Zone "X": Areas determined to be outside the 0.2% annual chance floodplain.

LEGEND

- 5/8in CAPPED IRON ROD SET
- IRON PIPE FOUND (AS NOTED)
- UTILITY POLE
- GUY ANCHOR
- TJ TELECOM JUNCTION
- TREE

R/W	RIGHT-OF-WAY
POC	POINT OF COMMENCEMENT
POB	POINT OF BEGINNING
Sq Ft	SQUARE FEET

- PAVEMENT EDGE
- GRAVEL EDGE
- OHU — OVERHEAD UTILITY LINES
- GUY — GUY WIRE
- FENCE
- DITCH
- RW — PUBLIC R/W
- TAX PARCEL BOUNDARY
- RIGHT-OF-WAY CENTER LINE
- EXISTING EASEMENT
- TIE LINE
- ACCESS/UTILITY R/W
- LAND SPACE

RAWLAND TOWER SURVEY
SITE NAME:
BELWOOD
Site Number: 443107
156 Pete Mauney Road, Lawndale, NC 28090
Number Ten Township, Cleveland County, North Carolina

SURVEY DATE: 07–08–2017

DRAWN BY: NB
CHECKED BY: TLS
FIELD CREW: TLS
APPROVED BY: TLS

COVER SHEET

PROPERTY INFORMATION

PARENT PARCEL

A. KENNETH L. PHILLIPS &
IRIS B. PHILLIPS
DEED BOOK 1395, PAGE 0435
PARCEL 41652

ADJOINING PARCELS:

(Immediate Vicinity Only)

B. DEBBIE PHILLIPS BUCKNER
DEED BOOK 1417, PAGE 1914
PLAT BOOK 27, PAGE 29
PARCEL 58027

C. KEITH CARTER
DEED BOOK 1609, PAGE 0278
PARCEL 51768

SURVEYOR'S NOTES ON TITLE EXAMINATION

Reference: Report of Title, prepared by Fidelity National Title Insurance Company, Order No: 25371266, Issue Date: 06-27-2017, issued in respect of Parent Parcel.

(Surveyor's treatment of Title Examination Items is limited to the scope described in ALTA/NSPS 2016 requirements, Section 6. C. ii., and is limited to determination of the *extent of land*, that Title Items may influence, if any. Surveyor may indicate where review by Title Attorney may be warranted.)

Item 1: Taxes: Not subject to representation on Survey Map.

Item 2: Right of Way Agreement, in favor of: North Carolina Department of Transportation, Deed Book 1279, Page 255: Right-of-Way Agreement, SR 1615. Influences Parent Parcel and Lessee's Access & Utility R/W as shown hereon. Does not Influence Lessee's Land Space.

Item 3: Boundary Line Agreement by and between: Donald W. Dixon and Matilda B. Dixon, Dale F. Dixon, Mary Sue D. Blanton, Roland Blanton, Daniel L. Mauney, Suzette S. Mauney and Michael G. Mauney and Susan P. Mauney, Deed Book 1395, Page 425. Pertains to Northern Line of Parent Parcel and its relationship to adjoining Parcel to North. Pre-dates conveyance of Parent Parcel to Phillips, (Parent Parcel as conveyed to Phillips assumed to include any agreed changes to property lines, not addressed by this Survey). No influence on Lessee's Land Space of Access & Utility R/W.

Item 4: Plat Book 27, Page 29: Plat creating Parcel B, provides 45' Access Easement across Parcel A to Parcel B. Influences Parent Parcel and Lessee's Access & Utility R/W as shown hereon. Does not Influence Lessee's Land Space.

Item 5: Right of Way Agreement in favor of: Duke Energy, Deed Book 1439, Page 655:
Provides Easement of 15' on each side of Power Line across Parent Parcel. Assumed to apply to power line crossing Parent Parcel in vicinity of site and assumed to influences Parent Parcel and Lessee's Access & Utility R/W as shown hereon. Does not Influence Lessee's Land Space.

SURVEY & MAP CAVEATS:

Surveyed information hereon includes Topography and other features as shown on Boundary Sheets.

Parcel Boundary information is shown according to Plat & Deed data relative to monuments and other property evidence as found and shown hereon. No Boundary Survey performed.

Public R/W shown according to available Plat data. Property extends to Centerline of Road, where so shown, per Deed.

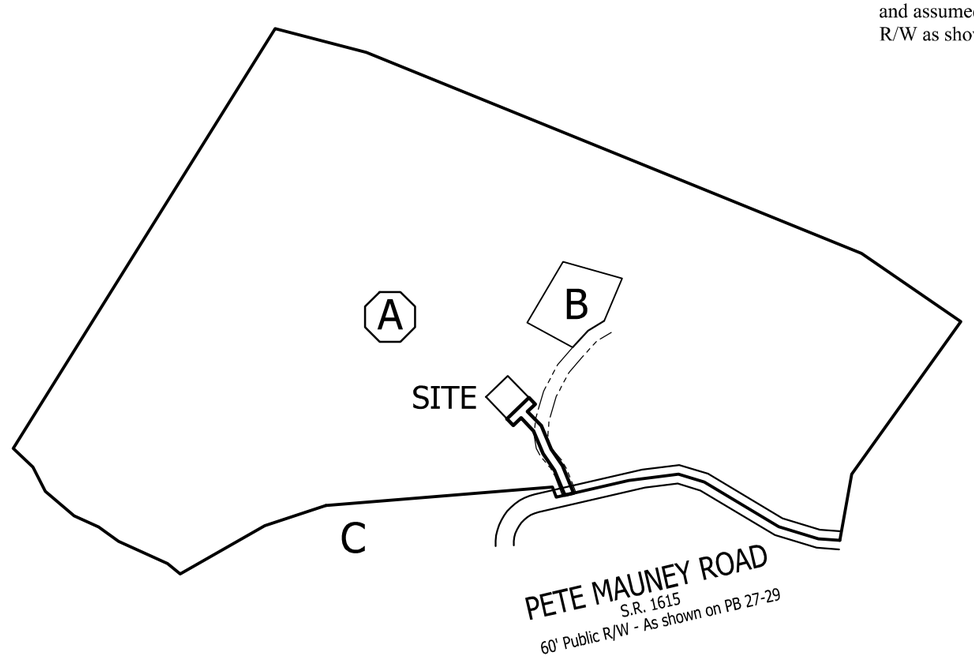

0' 500' 1000' 1500'

CORDELL
LAND SURVEYING
2857 Camp Creek Road,
Murphy, NC 28906
(828) 494-7058

PREPARED FOR

verizon

CELLCO PARTNERSHIP
D/B/A Verizon Wireless

RAWLAND TOWER SURVEY
SITE NAME:
BELWOOD
Site Number: 443107
156 Pete Mauney Road, Lawndale, NC 28090
Number Ten Township, Cleveland County, North Carolina

SURVEY DATE: 07-08-2017

SCALE: 1in = 500'
DRAWN BY: NB
CHECKED BY: TLS
FIELD CREW: TLS
APPROVED BY: TLS

OVERVIEW

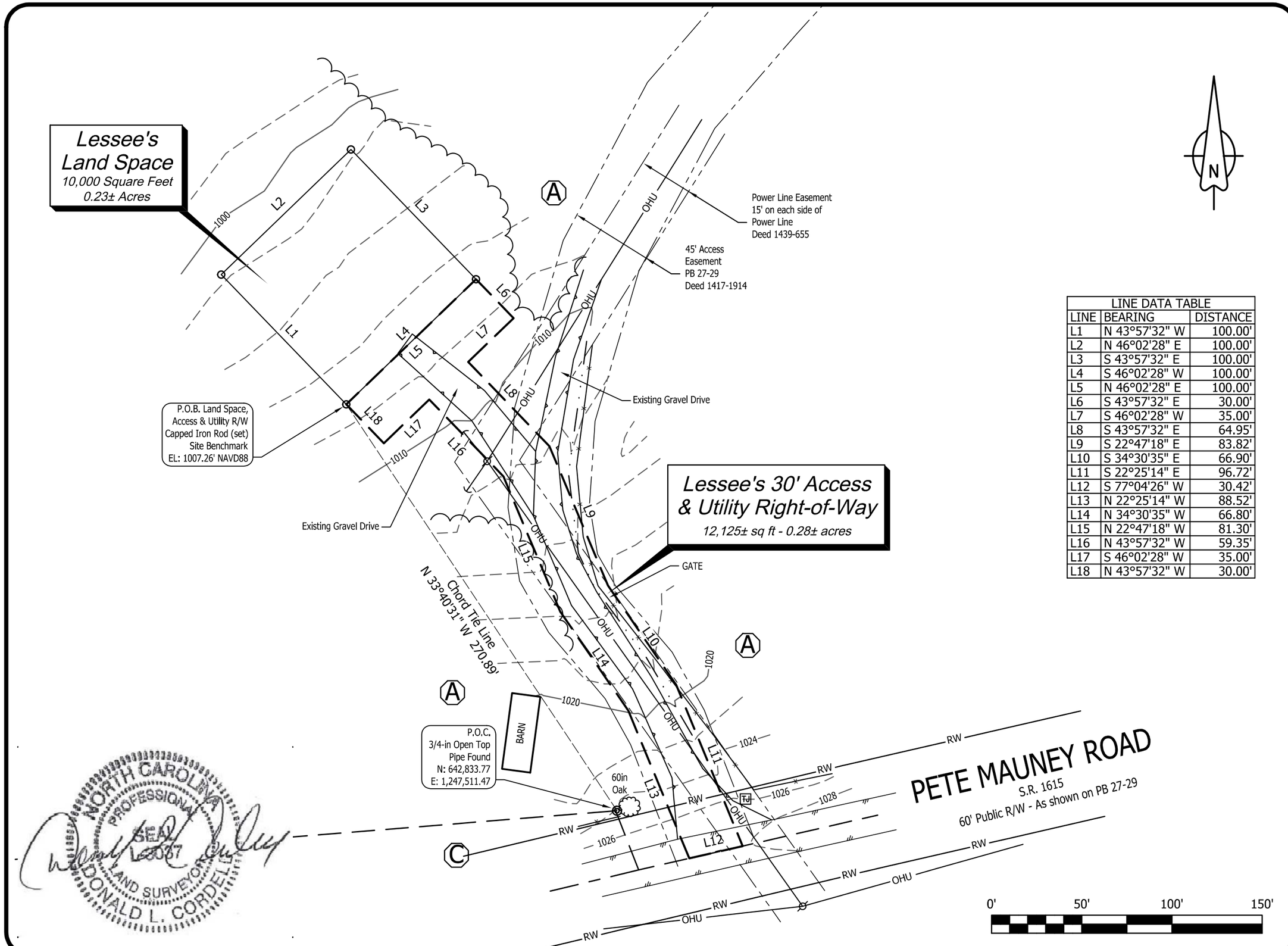

LINE DATA TABLE		
LINE	BEARING	DISTANCE
L1	N 43°57'32" W	100.00'
L2	N 46°02'28" E	100.00'
L3	S 43°57'32" E	100.00'
L4	S 46°02'28" W	100.00'
L5	N 46°02'28" E	100.00'
L6	S 43°57'32" E	30.00'
L7	S 46°02'28" W	35.00'
L8	S 43°57'32" E	64.95'
L9	S 22°47'18" E	83.82'
L10	S 34°30'35" E	66.90'
L11	S 22°25'14" E	96.72'
L12	S 77°04'26" W	30.42'
L13	N 22°25'14" W	88.52'
L14	N 34°30'35" W	66.80'
L15	N 22°47'18" W	81.30'
L16	N 43°57'32" W	59.35'
L17	S 46°02'28" W	35.00'
L18	N 43°57'32" W	30.00'

CORDELL
LAND SURVEYING
2857 Camp Creek Road,
Murphy, NC 28906
(828) 494-7058

PREPARED FOR

verizon

CELLCO PARTNERSHIP
D/B/A Verizon Wireless

RAWLAND TOWER SURVEY

SITE NAME:
BELWOOD
Site Number: 443107
156 Pete Mauney Road, Lawndale, NC 28090
Number Ten Township, Cleveland County, North Carolina

SURVEY DATE: 07-08-2017

SCALE: 1in = 50'
DRAWN BY: NB
CHECKED BY: TLS
FIELD CREW: TLS
APPROVED BY: TLS

LESSEE'S BOUNDARIES

SHEET 3 OF 4

SURVEYOR'S DESCRIPTIONS

LESSEE'S LAND SPACE (PROPOSED):

Situated in the Number Ten Township, Cleveland County, North Carolina. Known as being a 10,000 square feet Lessee's Land Space over and upon Tax Parcel Number 41652, Cleveland County, North Carolina, being property now or formerly conveyed to Kenneth L. Phillips and Iris B. Phillips, of record in Deed Book 1395, Page 435, in the Cleveland County Registry, and being more particularly described as follows:

COMMENCE at a ¾-inch Open Top Pipe (found), at a southern corner of aforesaid Parcel, located at North Carolina State Plane Coordinates: N: 642,833.77, E: 1,247,511.47;
Thence along a Chord Tie line, having a bearing of N 33°40'31" W, a distance of 270.89 feet to a 5/8in Capped Iron Rod (set), which is the Point of Beginning of the Lessee's Land Space described herein;

Thence N 43°57'32" W, a distance of 100.00 feet to a 5/8-inch Capped Iron Rod (set);
Thence N 46°02'28" E, a distance of 100.00 feet to a 5/8-inch Capped Iron Rod (set);
Thence S 43°57'32" E, a distance of 100.00 feet to a 5/8-inch Capped Iron Rod (set);
Thence S 46°02'28" W, a distance of 100.00 feet to the Point of Beginning and containing 0.23 Acres (10,000 Square Feet) more or less.

LESSEE'S 30' ACCESS & UTILITY RIGHT-OF-WAY (PROPOSED):

Situated in the Number Ten Township, Cleveland County, North Carolina. Known as being a 12,125 square feet Lessee's 30' Access & Utility Right-of-Way over and upon Tax Parcel Number 41652, Cleveland County, North Carolina, being property now or formerly conveyed to Kenneth L. Phillips and Iris B. Phillips, of record in Deed Book 1395, Page 435, in the Cleveland County Registry, and being more particularly described as follows:

COMMENCE at a ¾-inch Open Top Pipe (found), at a southern corner of aforesaid Parcel, located at North Carolina State Plane Coordinates: N: 642,833.77, E: 1,247,511.47;
Thence along a Chord Tie line, having a bearing of N 33°40'31" W, a distance of 270.89 feet to a 5/8in Capped Iron Rod (set), which is the Point of Beginning of the Lessee's 30' Access & Utility Right-of-Way described herein;

Thence N 46°02'28" E, a distance of 100.00 feet to a 5/8-inch Capped Iron Rod (set);
Thence S 43°57'32" E, a distance of 30.00 feet;
Thence S 46°02'28" W, a distance of 35.00 feet;
Thence S 43°57'32" E, a distance of 64.95 feet;
Thence S 22°47'18" E, a distance of 83.82 feet;
Thence S 34°30'35" E, a distance of 66.90 feet;
Thence S 22°25'14" E, a distance of 96.72 feet to a Point on the Southern Line of aforesaid Parcel, which is also the center line of Pete Mauney Road, also known as S.R. 1615;
Thence S 77°04'26" W, along said Line, a distance of 30.42 feet;
Thence N 22°25'14" W, leaving said Line, a distance of 88.52 feet;
Thence N 34°30'35" W, a distance of 66.80 feet;
Thence N 22°47'18" W, a distance of 81.30 feet;
Thence N 43°57'32" W, a distance of 59.35 feet;
Thence S 46°02'28" W, a distance of 35.00 feet;
Thence N 43°57'32" W, a distance of 30.00 feet to the Point of Beginning and containing 0.28 Acres (12,125 Square Feet) more or less.

NORTH CAROLINA PROFESSIONAL SEAL L-3087 LAND SURVEYOR DONALD L. CORDELL

LEGAL DESCRIPTION OF PARENT PARCEL

Property located in Cleveland, NC

Being located on the Northern side of Pete Mauney Road (SR 1615) and being bounded on the Northeast by Dixon et al., on the South by Laton, Edwards et al., and on the West by Dixon and being more particularly described as follows:

Beginning at an iron set in the centerline of Pete Mauney Road (SR 1615) said iron being located in the Southeasternmost corner of the herein described lot, said iron also being located S 79-12-57 E 116.59 feet from the North end of a culvert under the road; thence the following calls and distances with Pete Mauney Road, N 86-19-30 W 71.31 feet to an unmarked point; thence N 73-40-54 W 136.39 feet to an unmarked point; thence N 59-35-53 W 286.58 feet to an unmarked point; thence N 73-36-34 W 89.08 feet; thence S 82-22-51 W 115.67 feet; thence S 76-26-31 W 293.90 feet to an iron set ; thence N 21-54-54 W 40.75 feet to an unmarked point at a fence corner located S 84-50-09 W .77 feet from an existing pipe; thence with the Northern line of Edwards (Deed Book 1222 at Page 682) S 84-50-09 W 749.68 feet to a pipe; thence with the Turas line, S 79-45-55 W 212.38 feet to a rebar; thence with the Parker line (Deed Book 1227 at Page 867) S 61-46-02 W 281.86 feet to a point in the branch, passing over an iron set at 241.86 feet; thence the following calls with the branch, N 56-13-24 W 10.78 feet; N 24-09-41 W 9.26 feet; N 53-10-35 W 33.47 feet; N 65-22-58 W 107.98 feet; N 18-09-00 W 17.02 feet; N 52-43-35 W 40.37 feet; N 83-07-56 W 16.24 feet; N 65-35-51 W 29.14 feet; N 42-22-33 W 57.00 feet; N 54-34-14 W 21.47 feet; N 74-07-05 W 21.41 feet; N 57-09-47 W 19.21 feet; N 78-06-29 W 67.56 feet; N 43-45-43 W 25.25 feet; N 35-43-18 W 8.07 feet; N 23-12-26 W 14.43 feet; N 01-51-50 W 19.75 feet; N 67-18-51 W 16.76 feet; S 44-13-47 W 21.82 feet; N 55-48-50 W 30.39 feet; N 29-04-33 W 12.98 feet; N 67-21-37 W 25.41 feet; N 13-34-55 W 13.76 feet; N 87-19-51 W 33.94 feet; N-62-13-46 W 34.20 feet to an existing iron in the branch; thence with the Dixon line (Deed Book 1251 at Page 215) N 29-57-01 E 1614.29 feet to a tall iron in the common corner of Dixon, Mauney and Lee; thence with the Southern line of Dixon, S 79-38-41 E 527.80 feet to an iron set in the hedge row and road bed; thence S 66-42-50 E 1186.34 feet to an iron set in the hedge row; thence S 71-40-10 E 318.22 feet to an iron set in the hedge row; thence S 56-51-02 E 463.24 feet to an oak tree; thence with the Eastern line of the herein described tract, S 35-41-59 W 54.47 feet to an existing iron; thence S 35-41-59 W 159.91 feet to a rebar; thence S 35-32-21 W 156.63 feet to a rebar; thence S 35-34-24 W 99.90 feet to a rebar; thence S 35-37-10 W 155.95 feet to a rebar set in Johnson's corner (Deed Book 1098 at Page 2435); thence S 06-36-49 W 238.10 feet to the place of beginning containing 74.556 acres according to a survey by T. Scott Bankhead, PLS, dated April 1, 2000.

LESS AND EXCEPT that portion of property conveyed to Debbie Phillips Buckner and Lon Buckner from Kenneth L. Phillips and Iris B. Phillips by North Carolina General Warranty Deed dated June 16, 2004 and recorded June 17, 2004 in Deed Book 1417, Page 1914.

AND BEING the same property conveyed to Kenneth L. Phillips and Iris B. Phillips from Daniel L. Mauney and Suzette S. Mauney by her Attorney In Fact, Daniel L. Mauney, Michael G. Mauney and Susan P. Mauney by their Attorney In Fact, Daniel L. Mauney by North Carolina General Warranty Deed dated November 06, 2003 and recorded November 08, 2003 in Deed Book 1395, Page 435.

Tax Parcel No. 41652

CORDELL
LAND SURVEYING
2857 Camp Creek Road,
Murphy, NC 28906
(828) 494-7058

PREPARED FOR
verizon
CELLCO PARTNERSHIP
D/B/A Verizon Wireless

RAWLAND TOWER SURVEY
SITE NAME:
BELWOOD
Site Number: 443107
156 Pete Mauney Road, Lawndale, NC 28090
Number Ten Township, Cleveland County, North Carolina

SURVEY DATE: 07-08-2017

DRAWN BY: NB
CHECKED BY: TLS
FIELD CREW: TLS
APPROVED BY: TLS

DESCRIPTIONS & TITLE
SHEET 4 OF 4

GENERAL NOTES

1. PRIOR TO THE START OF CONSTRUCTION, THE CONTRACTOR SHALL BE RESPONSIBLE FOR ENSURING THAT ALL REQUIRED PERMITS AND APPROVALS HAVE BEEN OBTAINED. NO CONSTRUCTION OR FABRICATION SHALL BEGIN UNTIL THE CONTRACTOR HAS RECEIVED AND THOROUGHLY REVIEWED ALL PLANS AND OTHER DOCUMENTS APPROVED BY ALL APPLICABLE PERMITTING AUTHORITIES.

2. ALL WORK SHALL BE PERFORMED IN ACCORDANCE WITH THESE PLANS AND THE CODES, REGULATIONS, AND STANDARDS OF ALL APPLICABLE GOVERNING AUTHORITIES.

3. THE GENERAL CONTRACTOR SHALL VERIFY THAT ALL EXISTING TOPOGRAPHY AND HORIZONTAL GEOMETRY IS AS INDICATED ON THESE DRAWINGS. NO ADDITIONAL COMPENSATION SHALL BE PAID TO THE CONTRACTOR FOR DAMAGE OR REPAIR TO THESE FACILITIES CAUSED BY THE CONTRACTOR'S WORK FORCE. IMMEDIATELY NOTIFY THE LESSEE'S CONSTRUCTION MANAGER OF ANY DISCREPANCIES OR INTERFERENCE WHICH AFFECT THE WORK OF THIS CONTRACT.

4. THE CONTRACTOR SHALL MAINTAIN ADEQUATE DRAINAGE AT ALL TIMES. DO NOT ALLOW WATER TO STAND OR POND. ANY DAMAGE TO STRUCTURES OR WORK ON THE SITE CAUSED BY INADEQUATE MAINTENANCE OF DRAINAGE PROVISIONS WILL BE THE RESPONSIBILITY OF THE CONTRACTOR AND ANY COST ASSOCIATED WITH REPAIRS FOR SUCH DAMAGE WILL BE AT THE CONTRACTOR'S EXPENSE.

5. ALL WASTE MATERIAL SHALL BE PROPERLY DISPOSED OF OFF-SITE OR AS DIRECTED BY THE LESSEE'S CONSTRUCTION MANAGER AND IN ACCORDANCE WITH JURISDICTIONAL AUTHORITIES.

6. ANY PROPERTY DAMAGE CAUSED BY THE CONTRACTOR OR HIS OPERATIONS SHALL BE CORRECTED AND/OR RESTORED TO THE SATISFACTION OF THE PROPERTY OWNER(S) AND THE LESSEE'S CONSTRUCTION MANAGER AT NO ADDITIONAL COST TO THE OWNER.

7. CONTRACTOR SHALL MAINTAIN 20' HORIZONTAL CLEARANCE FROM CENTERLINE OF EXISTING POWER LINES OR AS REQUESTED BY THE POWER COMPANY.

8. NOTIFY THE LESSEE'S REPRESENTATIVES TWENTY-FOUR HOURS PRIOR TO CONSTRUCTION TO ALLOW THE LESSEE'S REPRESENTATIVES TO LOOK AT THE SITE PRIOR TO EXCAVATION.

9. THE CONTRACTOR SHALL INCLUDE ALL WORK REQUIRED TO CO-LOCATE ON THE EXISTING TOWER INCLUDING ALL NECESSARY SITE IMPROVEMENTS, FOUNDATIONS, ELECTRICAL IMPROVEMENTS, SNAP INS, H-FRAME, AND OTHER ACCESSORIES FOR COMPLETE INSTALLATION.

10. THE CONTRACTOR IS RESPONSIBLE FOR THE INSTALLATION OF THE FOLLOWING EQUIPMENT: ANTENNAS, COAX CABLES, ICE BRIDGE, WAVEGUIDE LADDER, AND EQUIPMENT CABINETS. THE EQUIPMENT CABINETS SHALL BE TRANSPORTED TO THE SITE BY THE CONTRACTOR.

11. ALL CONCRETE SHALL BE NORMAL WEIGHT AND SHALL CONFORM TO THE ACI 301 AND THE FOLLOWING:
    -MINIMUM COMPRESSION STRENGTH 3,000 PSI
    -AIR ENTRAPMENT RANGE 3% TO 6%
    -SLUMP GREATER THAN 3", BUT NOT TO EXCEED 6".

12. CONTRACTOR TO NOTIFY THE LESSEE'S TESTING REPRESENTATIVE FORTY-EIGHT HOURS BEFORE CONCRETE POURS.

13. CONTRACTOR TO PROVIDE RED LINE CONSTRUCTION DRAWINGS TO TOWER OWNER AND LESSEE AT COMPLETION OF JOB.

UTILITY NOTES

1. APPLY FOR THE UTILITY SERVICE (ELECTRIC) NO LATER THAN THE NEXT BUSINESS DAY FOLLOWING AWARD OF CONTRACT. COORDINATE WITH THE ELECTRIC UTILITY COMPANY FOR EXACT TRANSFORMER LOCATION, METERING REQUIREMENTS, AND SERVICE ROUTING. COORDINATE WITH THE TELEPHONE UTILITY COMPANY FOR EXACT TELEPHONE REQUIREMENTS AND ROUTING OF SERVICE.

2. ALL UTILITY RELATED WORK SHALL BE PERFORMED IN ACCORDANCE WITH APPLICABLE UTILITY REQUIREMENTS. FIELD VERIFY EXISTING UTILITY LOCATIONS PRIOR TO CONSTRUCTION.

3. THE CONTRACTOR SHALL CONTACT UTILITIES AND LOCATOR SERVICE A MINIMUM OF 72 HOURS PRIOR TO THE START OF CONSTRUCTION. (NC ONE-CALL 811 OR 1-800-632-4949).

4. CONTRACTOR SHALL PROVIDE TRENCHING AND CONDUITS AS SHOWN OR AS REQUIRED BY LOCAL UTILITY.

5. NO PENETRATIONS TO THE TOWER FOUNDATION OF ANY KIND.

LEGEND

EXISTING		NEW
X 100.5	SPOT ELEVATION	712.9
95	CONTOUR LINE	98
SD	STORM DRAIN	SD
	CATCH BASIN	
R\W	RIGHT OF WAY	
	IRON PIN SET (IPS) 5/8" REBAR	
	IRON PIN FOUND (IPF)	
	BENCHMARK	
	CONCRETE MON. FOUND	
	CONCRETE MON. SET	
℄	CENTERLINE	
OHT	OVERHEAD TELEPHONE	
UGT	UNDERGROUND TELEPHONE	
OHP	OVERHEAD POWER	
UGP	UNDERGROUND POWER	
	UTILITY POLE	
	LIGHT POLE	
W	WATER LINE	
	WATER VALVE	
UGG	GAS LINE	
G	GAS VALVE	
ST	SANITARY SEWER	
Ⓜ	MANHOLE	

NOTE: THIS IS A GENERAL LEGEND.
SOME ITEMS MAY NOT APPLY TO THIS SITE.

LESSEE

TeleCAD Wireless
1961 NORTHPOINT BLVD, SUITE 130
HIXSON, TN 37343
PH: 423-843-9500
FAX: 423-843-9509

THE INFORMATION CONTAINED IN THIS SET OF DOCUMENTS IS PROPRIETARY BY NATURE. ANY USE OR DISCLOSURE OTHER THAN THAT WHICH RELATES TO THE CLIENT IS STRICTLY PROHIBITED.

A&E PROJECT #:	20171560879
DRAWN BY:	JSJ
CHECKED BY:	DMB

REVISIONS

NO.	DATE	BY	DESCRIPTION
D	12/5/17	CAD	PRELIMINARY REVIEW
C	11/22/17	CAD	PRELIMINARY REVIEW
B	11/01/17	CAD	PRELIMINARY REVIEW
A	08/29/17	JSJ	PRELIMINARY REVIEW

PROJECT No.
20171560879

SITE NAME:
BELWOOD

SITE NUMBER:
443107

SITE ADDRESS:
156 PETE MAUNEY ROAD
LAWNDALE, NC 28090

DESIGN TYPE:
RAWLAND

SHEET TITLE:
GENERAL NOTES

DRAWING NO.: GN1

REVISION: D

PARENT PARCEL
A. KENNETH L. PHILLIPS &
IRIS B. PHILLIPS
DEED BOOK 1395, PAGE 0435
PARCEL 41652

ADJOINING PARCELS:
(Immediate Vicinity Only)
B. DEBBIE PHILLIPS BUCKNER
DEED BOOK 1417, PAGE 1914
PLAT BOOK 27, PAGE 29
PARCEL 58027

C. KEITH CARTER
DEED BOOK 1609, PAGE 0278
PARCEL 51768

NOTES:

1. THIS DRAWING IS BASED ON A SITE SURVEY BY CORDELL LAND SURVEYING, DATED 04-25-2017. CONTRACTOR SHALL FIELD VERIFY ALL EXISTING CONDITIONS PRIOR TO COMMENCEMENT OF CONSTRUCTION.
2. THE PROPOSED USE DOES NOT REQUIRE FULL OR PART TIME EMPLOYEES AT THE SITE.
3. FOR GENERAL SITE WORK NOTES, SEE SHEET GN1.
4. FOR ELECTRICAL SYMBOLS, SEE SHEETS E1 & E2.
5. ALL NORTH ARROWS ON SITE PLANS ARE TRUE NORTH, UNLESS OTHERWISE SPECIFIED.

REFERENCE NOTES:

5 - TOWER ELEVATION. SEE DETAIL SHEET C4.

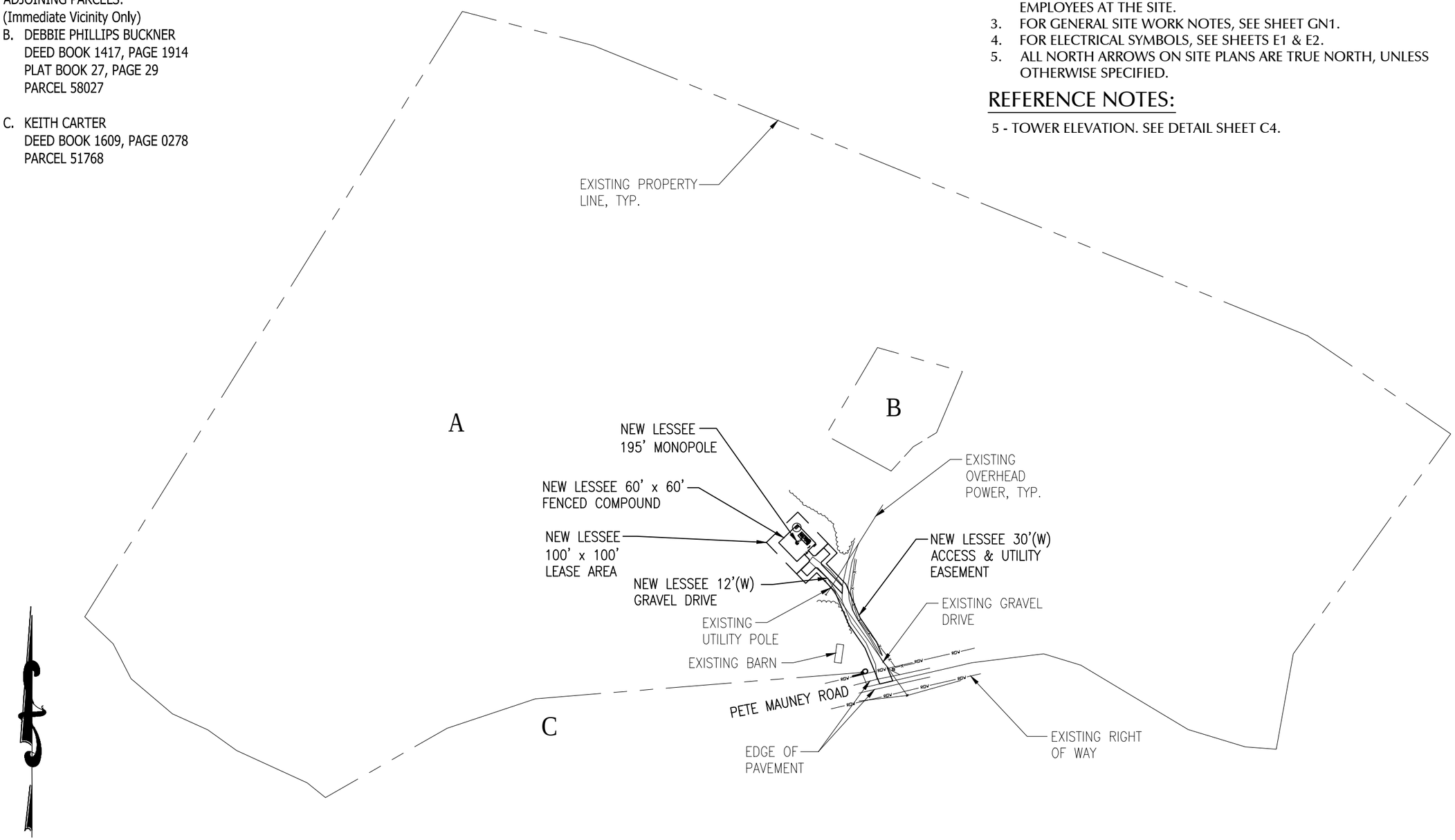

LESSEE

TeleCAD Wireless
1961 NORTHPOINT BLVD, SUITE 130
HIXSON, TN 37343
PH: 423-843-9500
FAX: 423-843-9509

THE INFORMATION CONTAINED IN THIS SET OF DOCUMENTS IS PROPRIETARY BY NATURE. ANY USE OR DISCLOSURE OTHER THAN THAT WHICH RELATES TO THE CLIENT IS STRICTLY PROHIBITED.

A&E PROJECT #:	20171560879
DRAWN BY:	JSJ
CHECKED BY:	DMB

REVISIONS

NO.	DATE	BY	DESCRIPTION
D	12/5/17	CAD	PRELIMINARY REVIEW
C	11/22/17	CAD	PRELIMINARY REVIEW
B	11/01/17	CAD	PRELIMINARY REVIEW
A	08/29/17	JSJ	PRELIMINARY REVIEW

PROJECT No.
20171560879

SITE NAME:
BELWOOD

SITE NUMBER:
443107

SITE ADDRESS:
156 PETE MAUNEY ROAD
LAWNDALE, NC 28090

DESIGN TYPE:
RAWLAND

SHEET TITLE:
OVERALL SITE LAYOUT PLAN

DRAWING NO.
C1

REVISION:
D

REFERENCE NOTES:

15 - SILT FENCE DETAIL. SEE DETAIL SHEET C5C.
25 - GRAVEL ACCESS ROAD & PARKING/TURNAROUND AREA. SEE DETAIL SHEET C5.

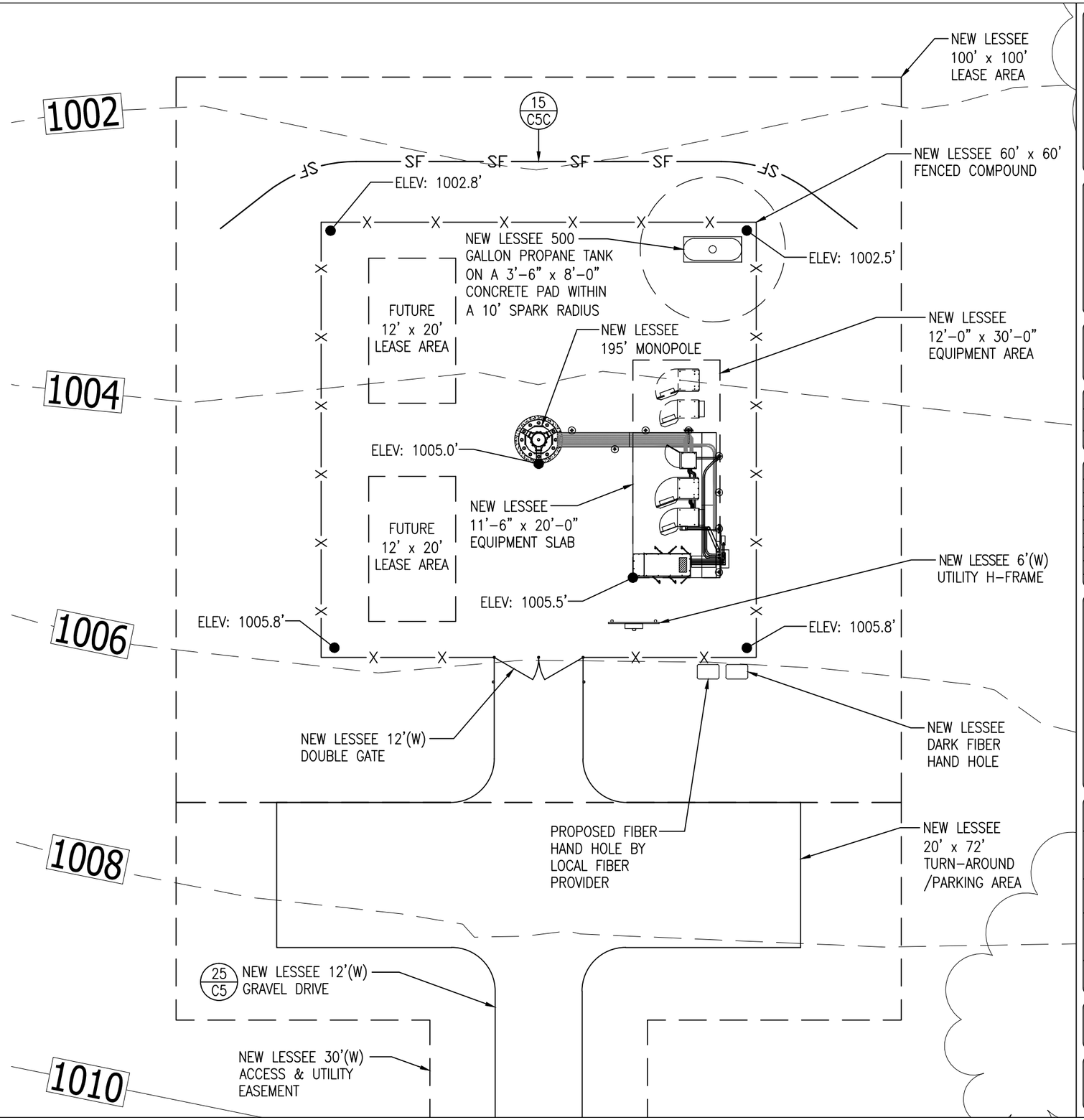

0' 15' 30' 45'
SCALE: 1" = 15'

LESSEE

TeleCAD Wireless
1961 NORTHPOINT BLVD, SUITE 130
HIXSON, TN 37343
PH: 423-843-9500
FAX: 423-843-9509

THE INFORMATION CONTAINED IN THIS SET OF DOCUMENTS IS PROPRIETARY BY NATURE. ANY USE OR DISCLOSURE OTHER THAN THAT WHICH RELATES TO THE CLIENT IS STRICTLY PROHIBITED.

A&E PROJECT #:	20171560879
DRAWN BY:	JSJ
CHECKED BY:	DMB

REVISIONS

NO.	DATE	BY	DESCRIPTION
D	12/5/17	CAD	PRELIMINARY REVIEW
C	11/22/17	CAD	PRELIMINARY REVIEW
B	11/01/17	CAD	PRELIMINARY REVIEW
A	08/29/17	JSJ	PRELIMINARY REVIEW

PROJECT No.
20171560879

SITE NAME:
BELWOOD

SITE NUMBER:
443107

SITE ADDRESS:
156 PETE MAUNEY ROAD
LAWNDALE, NC 28090

DESIGN TYPE:
RAWLAND

SHEET TITLE:
SITE GRADING PLAN

DRAWING NO.: C1A
REVISION: D

REFERENCE NOTES:

2 - LP TANK SLAB FOUNDATION DETAIL. SEE DETAIL SHEET C5A.
3 - MECHANICAL PLAN AND DETAILS. SEE DETAIL SHEET C5B.
14 - COMPOUND SURFACING. SEE DETAIL SHEET C5.
17 - WOVEN WIRE FENCE. SEE DETAIL SHEET C6.
18 - WOVEN WIRE CORNER, GATE, END, OR POST. SEE DETAIL SHEET C6.
19 - WOVEN WIRE DOUBLE GATE. SEE DETAIL SHEET C6.
20 - MUSHROOM STOP. SEE DETAIL SHEET C6.
21 - GATE STOP. SEE DETAIL SHEET C6.

BASIS OF DESIGN IS:
(1) RBA72
(1) RBA72-36
(1) RBS6120
GENERAL CONTRACTOR TO MODIFY SCOPE OF PROJECT BASED ON ACTUAL EQUIPMENT FURNISHED BY VZW

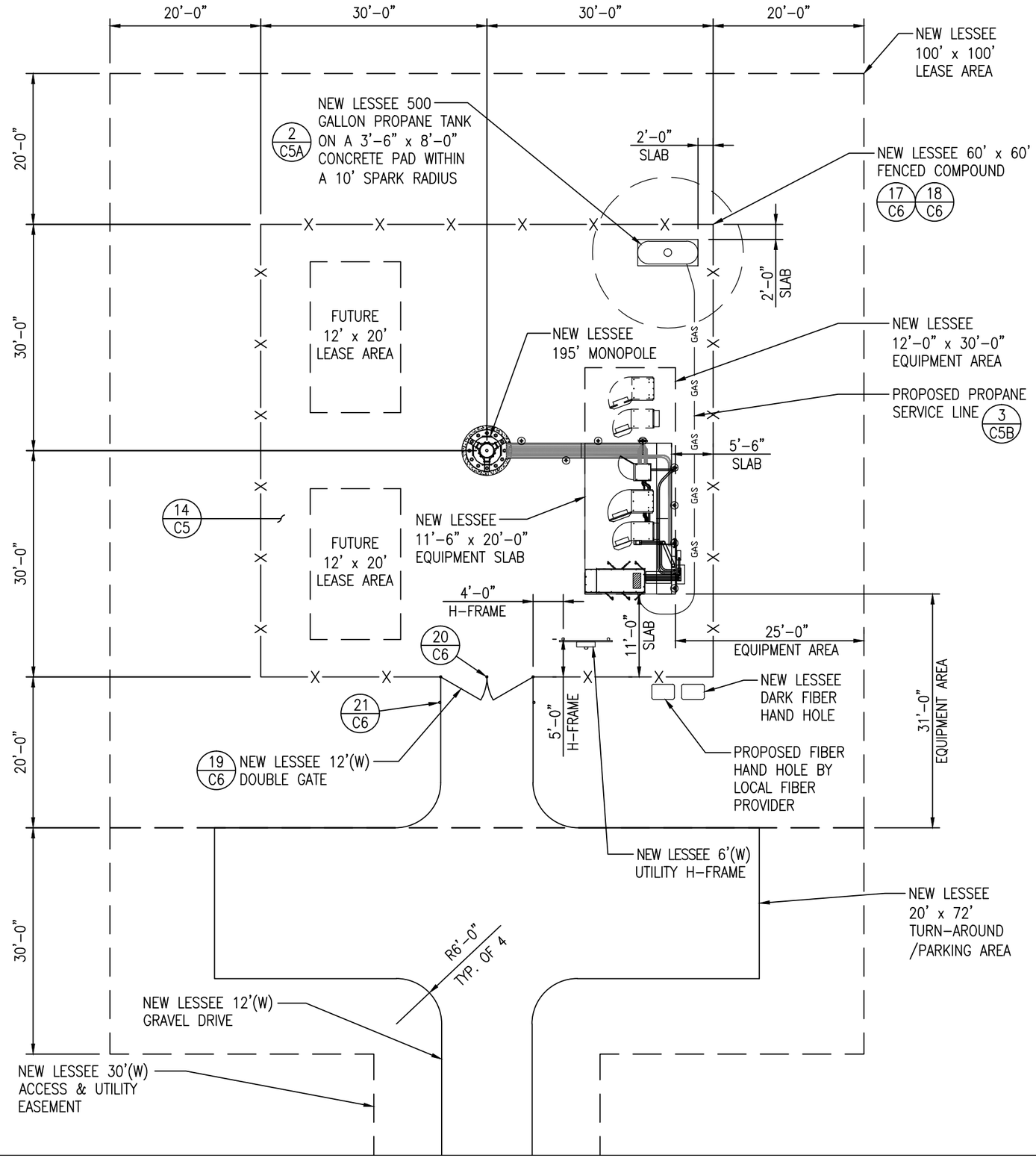

0' 15' 30' 45'
SCALE: 1" = 15'

LESSEE

TeleCAD Wireless
1961 NORTHPOINT BLVD, SUITE 130
HIXSON, TN 37343
PH: 423-843-9500
FAX: 423-843-9509

THE INFORMATION CONTAINED IN THIS SET OF DOCUMENTS IS PROPRIETARY BY NATURE. ANY USE OR DISCLOSURE OTHER THAN THAT WHICH RELATES TO THE CLIENT IS STRICTLY PROHIBITED.

A&E PROJECT #:	20171560879
DRAWN BY:	JSJ
CHECKED BY:	DMB

REVISIONS

NO.	DATE	BY	DESCRIPTION
D	12/5/17	CAD	PRELIMINARY REVIEW
C	11/22/17	CAD	PRELIMINARY REVIEW
B	11/01/17	CAD	PRELIMINARY REVIEW
A	08/29/17	JSJ	PRELIMINARY REVIEW

PROJECT No.
20171560879

SITE NAME:
BELWOOD

SITE NUMBER:
443107

SITE ADDRESS:
156 PETE MAUNEY ROAD
LAWNDALE, NC 28090

DESIGN TYPE:
RAWLAND

SHEET TITLE:
SITE LAYOUT PLAN

DRAWING NO.
C2

REVISION:
D

REFERENCE NOTES:

12 - ICE BRIDGE AT MONOPOLE. SEE DETAIL SHEET C4.

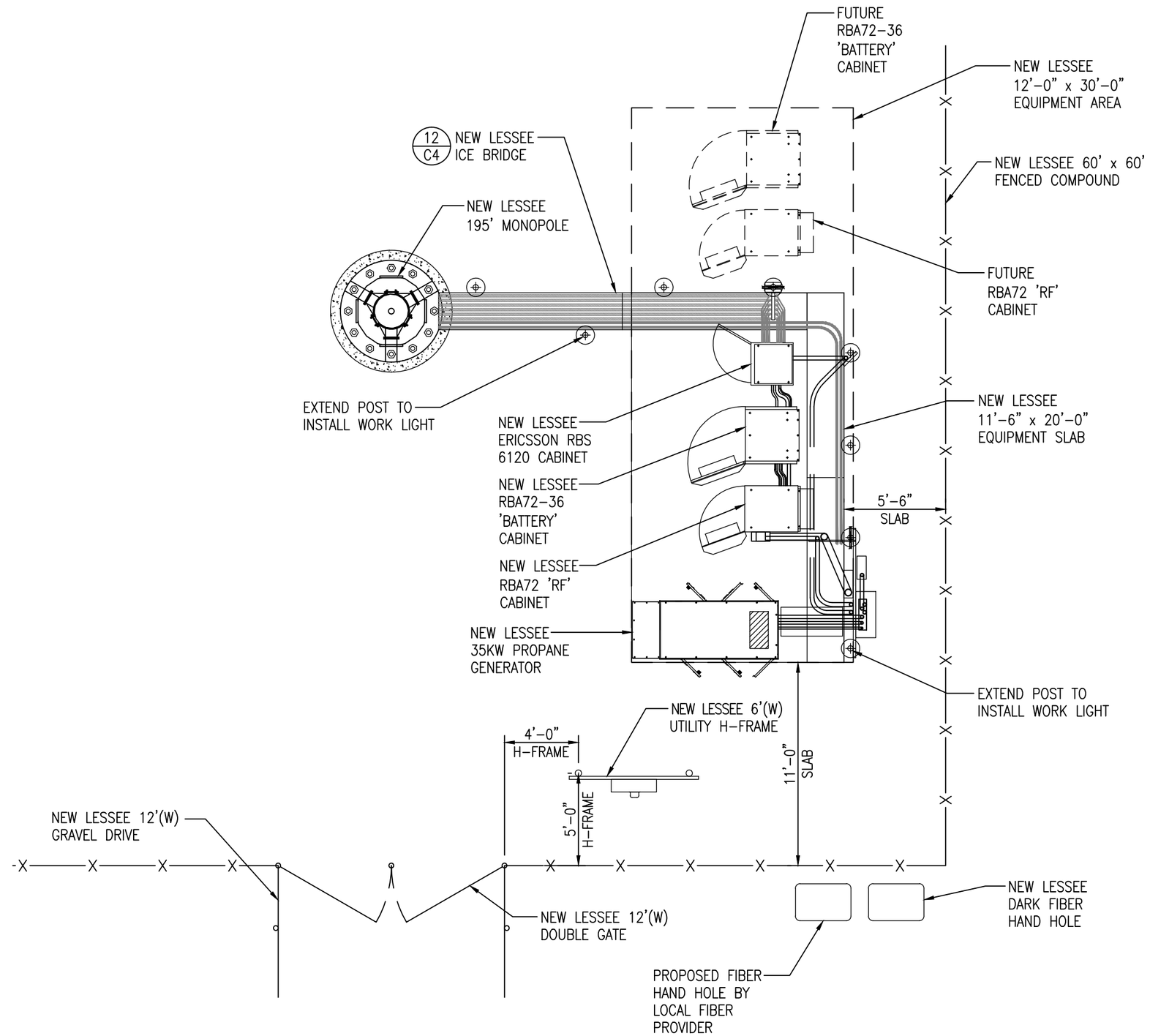

0' 6' 12' 18'

SCALE: 1" = 6'

LESSEE

TeleCAD Wireless
1961 NORTHPOINT BLVD, SUITE 130
HIXSON, TN 37343
PH: 423-843-9500
FAX: 423-843-9509

THE INFORMATION CONTAINED IN THIS SET OF DOCUMENTS IS PROPRIETARY BY NATURE. ANY USE OR DISCLOSURE OTHER THAN THAT WHICH RELATES TO THE CLIENT IS STRICTLY PROHIBITED.

A&E PROJECT #:	20171560879
DRAWN BY:	JSJ
CHECKED BY:	DMB

REVISIONS

NO.	DATE	BY	DESCRIPTION
D	12/5/17	CAD	PRELIMINARY REVIEW
C	11/22/17	CAD	PRELIMINARY REVIEW
B	11/01/17	CAD	PRELIMINARY REVIEW
A	08/29/17	JSJ	PRELIMINARY REVIEW

PROJECT No.: 20171560879

SITE NAME: BELWOOD

SITE NUMBER: 443107

SITE ADDRESS: 156 PETE MAUNEY ROAD LAWNDALE, NC 28090

DESIGN TYPE: RAWLAND

SHEET TITLE: ENLARGED LAYOUT PLAN

DRAWING NO.: C2A

REVISION: D

ROUTING NOTES (01B & 01D LAYOUTS):

1. REFER TO THE SITE PLAN FOR EQUIPMENT PAD LOCATION AND ORIENTATION.
2. RUN 4" TELCO CONDUIT OVERHEAD ON WAVEGUIDE BRIDGE USING 16" RADIUS SWEEPS AT ALL BENDS. FASTEN TO UNDERSIDE OF ICE BRIDGE PER CONDUIT HANGER DETAIL. RUN DOWN CABLE LADDER TO APPROX. 3 FT HIGH, THEN SWEEP OVER TO 12X12X6 PVC NEMA BOX MOUNTED TO SIDE OF RBA72 CABINET WITH CHASE NIPPLE THROUGH FACTORY KNOCKOUT.
3. RUN 2" POWER CONDUIT OVERHEAD ON WAVEGUIDE BRIDGE. FASTEN TO UNDERSIDE OF ICE BRIDGE PER CONDUIT HANGER DETAIL. RUN DOWN CABLE LADDER TO APPROX. 5 FT HIGH, THEN SWEEP OVER TO 6X6X6 PVC NEMA BOX MOUNTED TO SIDE OF RBA72 CABINET WITH CHASE NIPPLE THROUGH FACTORY KNOCKOUT.
4. RUN 2" POWER CONDUIT OVERHEAD ON WAVEGUIDE BRIDGE. FASTEN TO UNDERSIDE OF ICE BRIDGE PER CONDUIT HANGER DETAIL. RUN DOWN CABLE LADDER TO APPROX. 6" HIGH, THEN ELBOW OVER TO BACK OF PLINTH BELOW RBS6120 CABINET. PENETRATE PLINTH USING FIELD DRILLED OPENING.
5. RUN HYBRID CABLE OVERHEAD ON TRAPEZE SUSPENDED FROM WAVE GUIDE BRIDGE. SWEEP DOWN ONTO CABLE LADDER TO APPROX. 18 INCH HEIGHT, THEN SWEEP OVER TO PENETRATION IN DOGHOUSE ON BACK OF RBA72 CABINET.
6. GPS ANTENNA TO BE MOUNTED TO EXTENDED ICE BRIDGE POST, OR TO STANDARD HEIGHT POST USING EXTENDED MOUNTING PIPE, USING COMMSCOPE GPS-U MOUNTING KIT. MOUNT AS NEAR AS IS PRACTICAL TO RBA72 CABINET.
7. FASTEN CONDUITS TO UNISTRUT ON WAVEGUIDE BRIDGE AND TO CABLE LADDER WITH TWO PIECE HOT DIP GALVANIZED CONDUIT STRAPS.
8. BOLT CABINETS AND GENERATOR TO SLAB USING FASTENERS SPECIFIED BY EQUIPMENT MANUFACTURER IN FACTORY PROVIDED MOUNTING HOLES.
9. SAWCUT CONTROL JOINT TO BE TREATED WITH SIKADUR 51 SL SEALANT OR APPROVED EQUAL.

REFERENCE NOTES:

6 - EQUIPMENT PAD FOUNDATION SECTION A. SEE DETAIL SHEET C3.
7 - EQUIPMENT PAD FOUNDATION SECTION B. SEE DETAIL SHEET C3A.

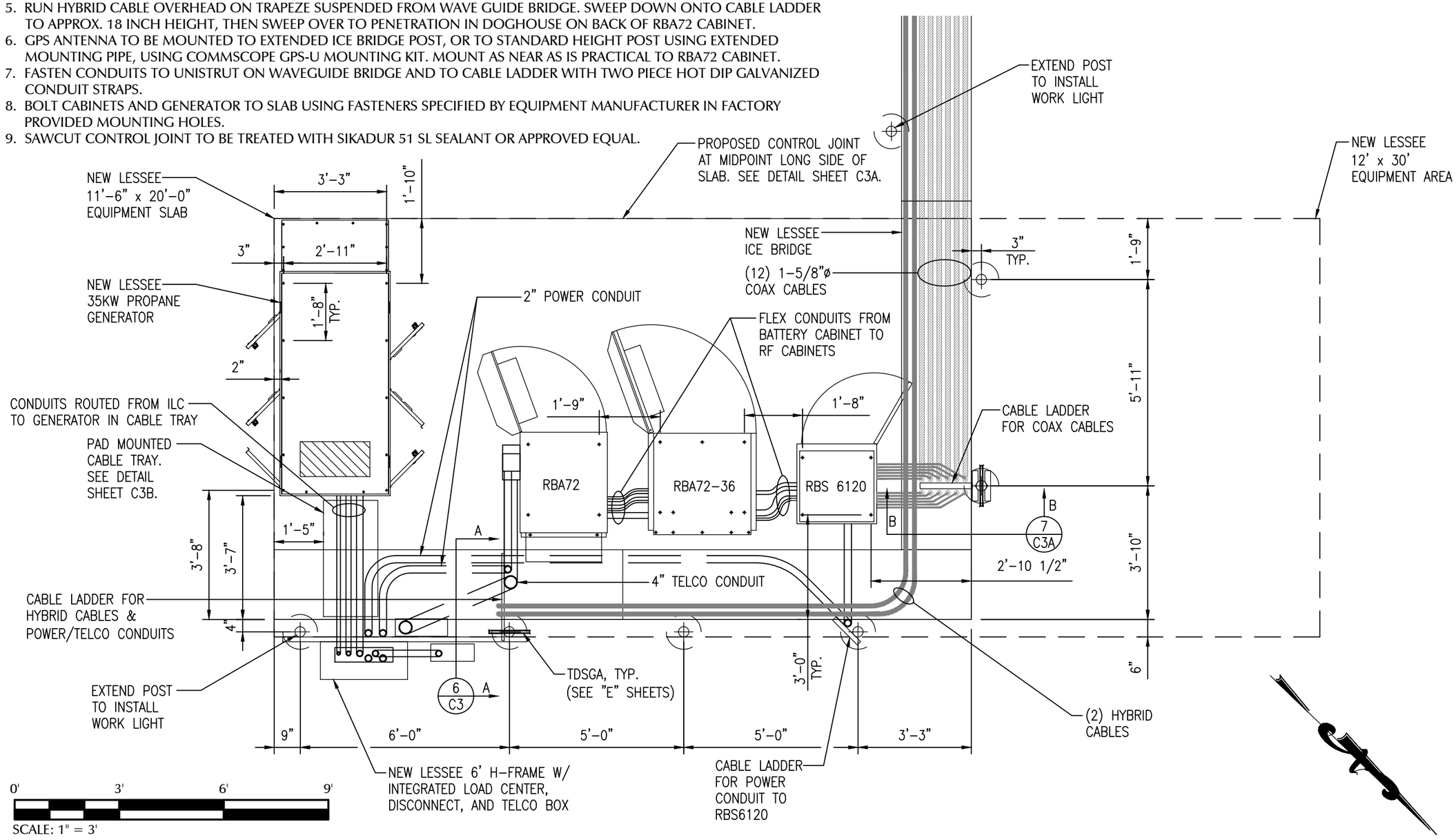

LESSEE

TeleCAD Wireless
1961 NORTHPOINT BLVD, SUITE 130
HIXSON, TN 37343
PH: 423-843-9500
FAX: 423-843-9509

THE INFORMATION CONTAINED IN THIS SET OF DOCUMENTS IS PROPRIETARY BY NATURE. ANY USE OR DISCLOSURE OTHER THAN THAT WHICH RELATES TO THE CLIENT IS STRICTLY PROHIBITED.

A&E PROJECT #:	20171560879
DRAWN BY:	JSJ
CHECKED BY:	DMB

REVISIONS

NO.	DATE	BY	DESCRIPTION
D	12/5/17	CAD	PRELIMINARY REVIEW
C	11/22/17	CAD	PRELIMINARY REVIEW
B	11/01/17	CAD	PRELIMINARY REVIEW
A	08/29/17	JSJ	PRELIMINARY REVIEW

PROJECT No.
20171560879

SITE NAME:
BELWOOD

SITE NUMBER:
443107

SITE ADDRESS:
156 PETE MAUNEY ROAD
LAWNDALE, NC 28090

DESIGN TYPE:
RAWLAND

SHEET TITLE:
EQUIPMENT LAYOUT PLAN

DRAWING NO.
C2B

REVISION:
D

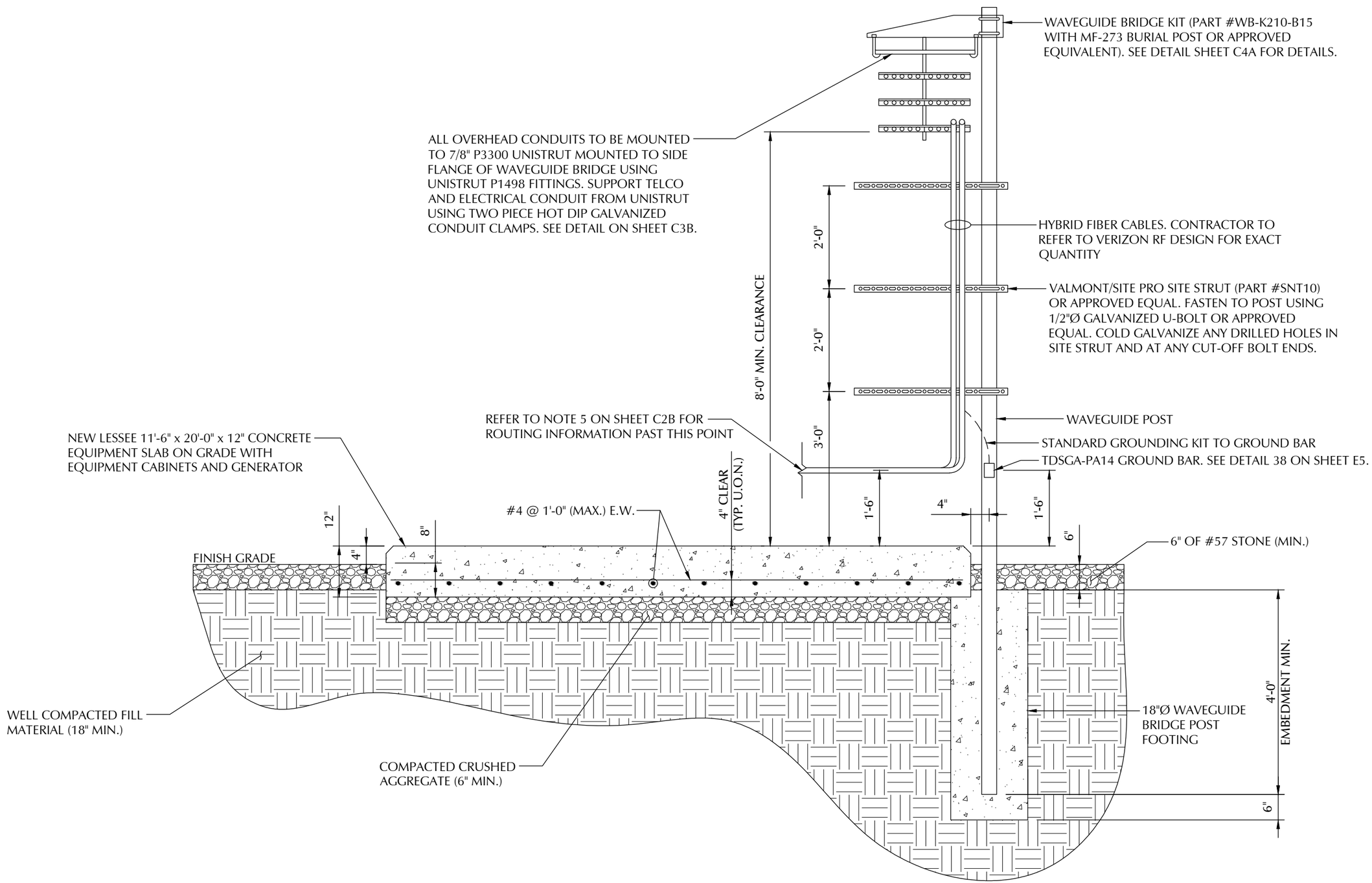

EQUIPMENT PAD FOUNDATION SECTION A

NTS

6 / C2B

LESSEE

TeleCAD Wireless
1961 NORTHPOINT BLVD, SUITE 130
HIXSON, TN 37343
PH: 423-843-9500
FAX: 423-843-9509

THE INFORMATION CONTAINED IN THIS SET OF DOCUMENTS IS PROPRIETARY BY NATURE. ANY USE OR DISCLOSURE OTHER THAN THAT WHICH RELATES TO THE CLIENT IS STRICTLY PROHIBITED.

A&E PROJECT #:	20171560879
DRAWN BY:	JSJ
CHECKED BY:	DMB

REVISIONS

NO.	DATE	BY	DESCRIPTION
D	12/5/17	CAD	PRELIMINARY REVIEW
C	11/22/17	CAD	PRELIMINARY REVIEW
B	11/01/17	CAD	PRELIMINARY REVIEW
A	08/29/17	JSJ	PRELIMINARY REVIEW

PROJECT No.
20171560879

SITE NAME:
BELWOOD

SITE NUMBER:
443107

SITE ADDRESS:
156 PETE MAUNEY ROAD
LAWNDALE, NC 28090

DESIGN TYPE:
RAWLAND

SHEET TITLE:
SITE DETAILS

DRAWING NO.
C3

REVISION:
D

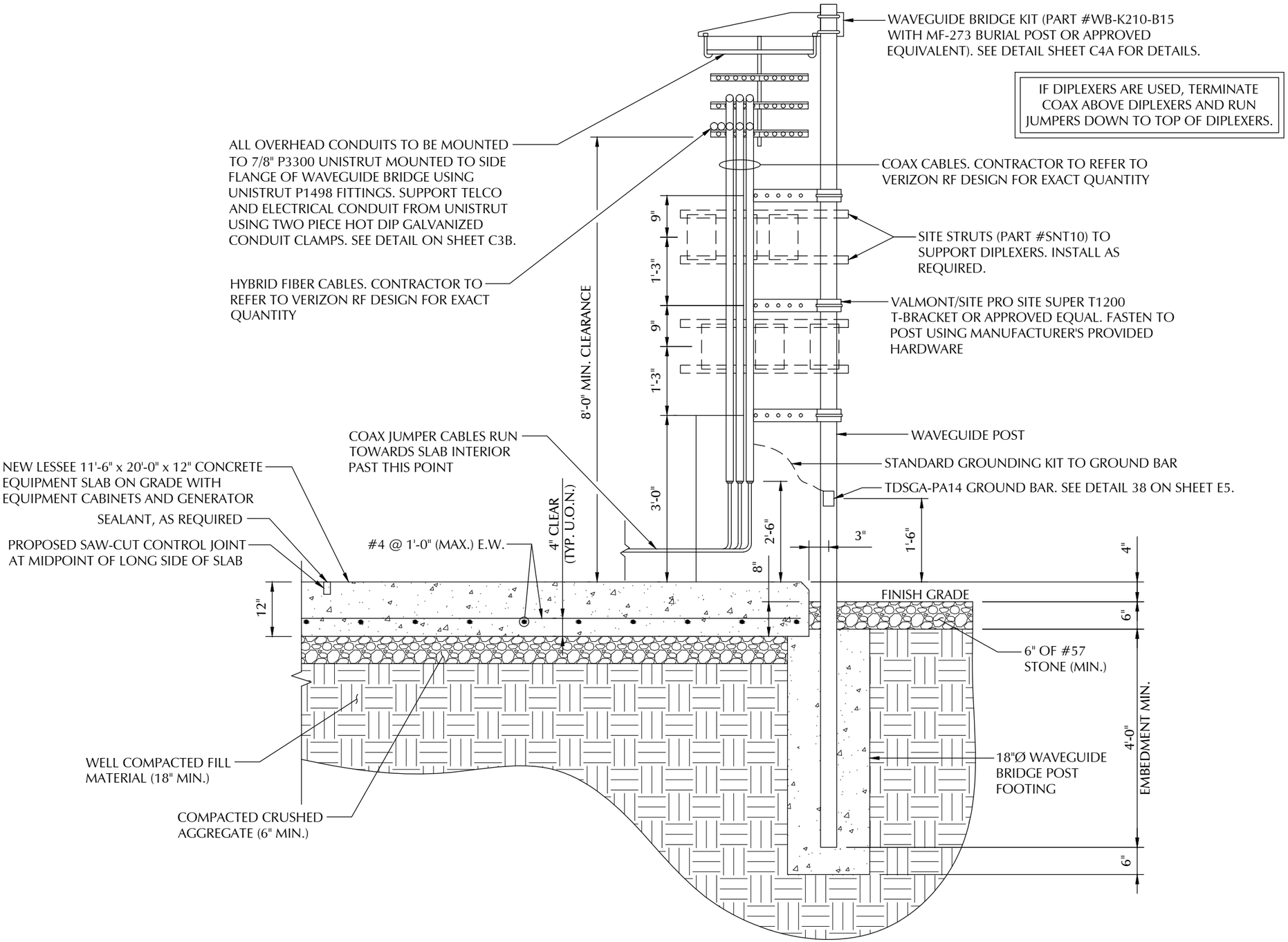

EQUIPMENT PAD FOUNDATION SECTION B

NTS

7 / C2B

LESSEE

TeleCAD Wireless
1961 NORTHPOINT BLVD, SUITE 130
HIXSON, TN 37343
PH: 423-843-9500
FAX: 423-843-9509

THE INFORMATION CONTAINED IN THIS SET OF DOCUMENTS IS PROPRIETARY BY NATURE. ANY USE OR DISCLOSURE OTHER THAN THAT WHICH RELATES TO THE CLIENT IS STRICTLY PROHIBITED.

A&E PROJECT #:	20171560879
DRAWN BY:	JSJ
CHECKED BY:	DMB

REVISIONS

NO.	DATE	BY	DESCRIPTION
D	12/5/17	CAD	PRELIMINARY REVIEW
C	11/22/17	CAD	PRELIMINARY REVIEW
B	11/01/17	CAD	PRELIMINARY REVIEW
A	08/29/17	JSJ	PRELIMINARY REVIEW

PROJECT No.: 20171560879

SITE NAME: BELWOOD

SITE NUMBER: 443107

SITE ADDRESS: 156 PETE MAUNEY ROAD LAWNDALE, NC 28090

DESIGN TYPE: RAWLAND

SHEET TITLE: SITE DETAILS

DRAWING NO.: C3A

REVISION: D

NOTE:

RUN CONDUITS DOWN FROM H-FRAME, ACROSS SLAB ON CABLE TRAY AND INTO CONDUIT AREA OF GENERATOR. CUT OPENING IN BOLT-ON PANEL AT END OF GENERATOR TO ALLOW PASSAGE OF CONDUITS, BUT MAINTAIN CAPABILITY TO REMOVE AND REPLACE PANEL, AND KEEP OUT INSECTS AND VERMIN. COORDINATE EXACT DETAILS OF OPENING WITH VZW CM.

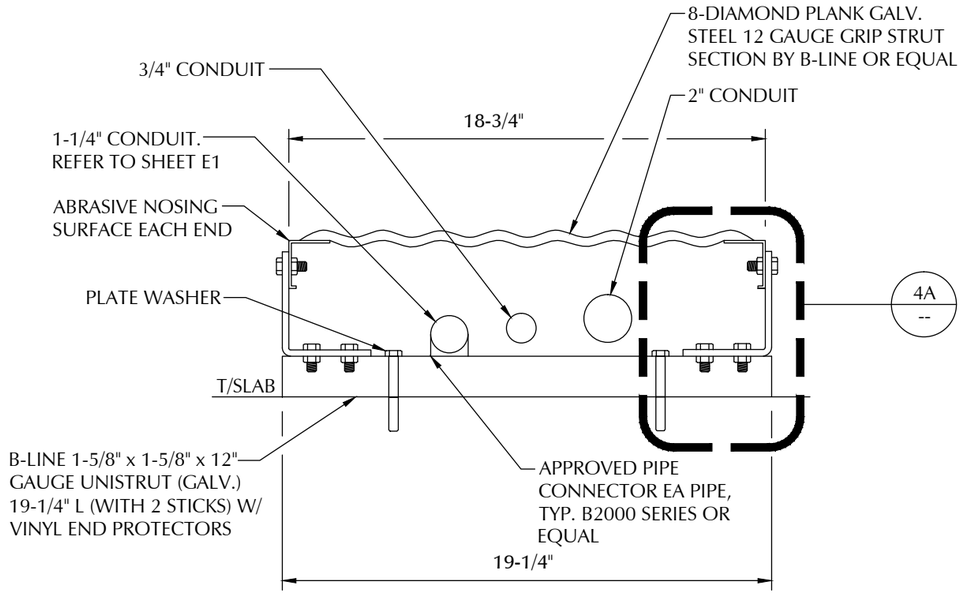

SECTION DETAIL THROUGH PAD MOUNTED CABLE TRAY

NTS

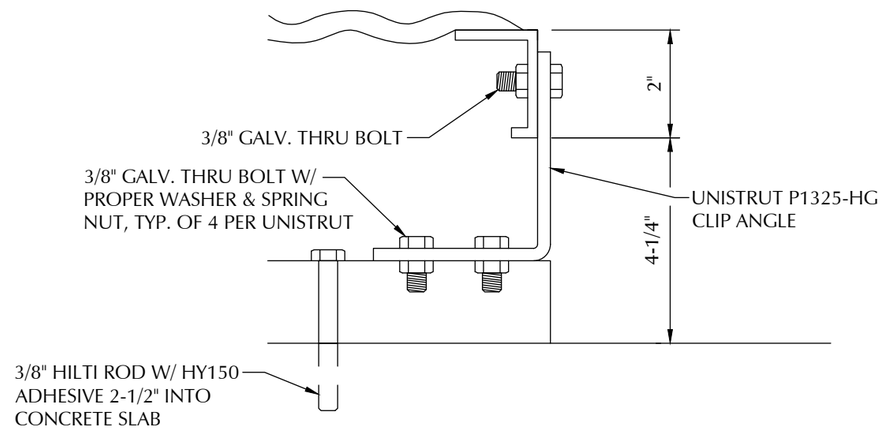

SECTION DETAIL THROUGH CABLE TRAY

4A
--

NTS

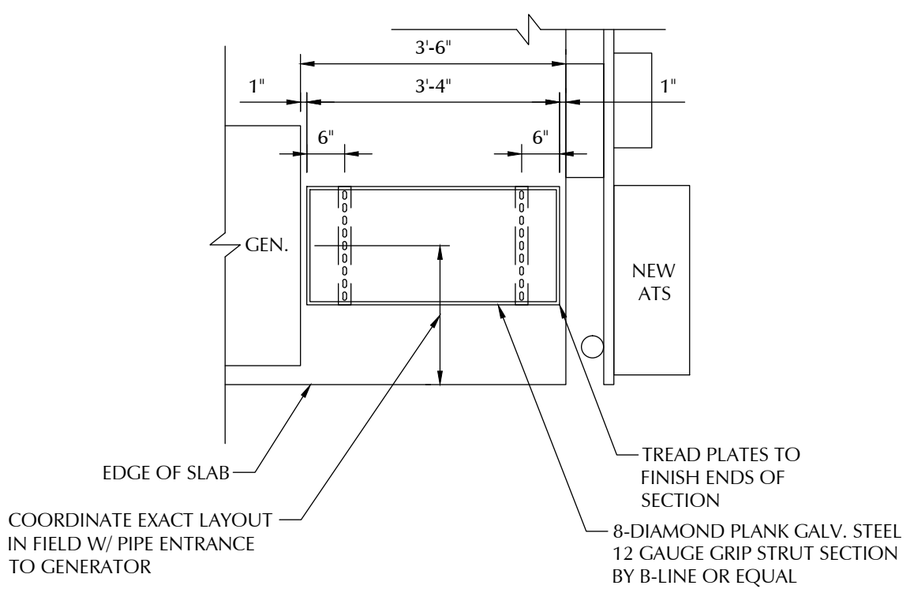

PAD MOUNTED CABLE TRAY - PLAN LAYOUT

NTS

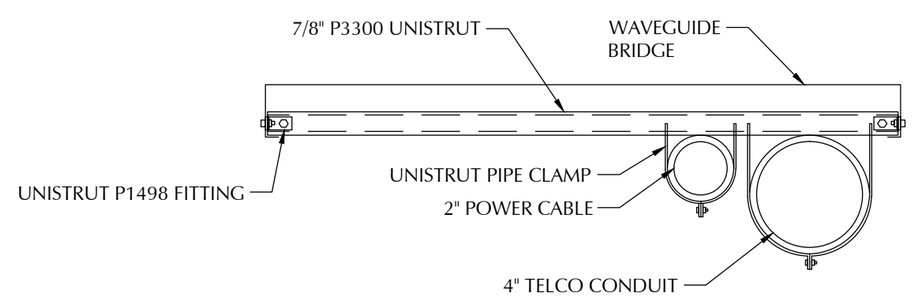

CONDUIT HANGER DETAIL

NTS

LESSEE

TeleCAD Wireless
1961 NORTHPOINT BLVD, SUITE 130
HIXSON, TN 37343
PH: 423-843-9500
FAX: 423-843-9509

THE INFORMATION CONTAINED IN THIS SET OF DOCUMENTS IS PROPRIETARY BY NATURE. ANY USE OR DISCLOSURE OTHER THAN THAT WHICH RELATES TO THE CLIENT IS STRICTLY PROHIBITED.

A&E PROJECT #:	20171560879
DRAWN BY:	JSJ
CHECKED BY:	DMB

REVISIONS

NO.	DATE	BY	DESCRIPTION
D	12/5/17	CAD	PRELIMINARY REVIEW
C	11/22/17	CAD	PRELIMINARY REVIEW
B	11/01/17	CAD	PRELIMINARY REVIEW
A	08/29/17	JSJ	PRELIMINARY REVIEW

PROJECT No.
20171560879

SITE NAME:
BELWOOD

SITE NUMBER:
443107

SITE ADDRESS:
156 PETE MAUNEY ROAD
LAWNDALE, NC 28090

DESIGN TYPE:
RAWLAND

SHEET TITLE:
SITE DETAILS

DRAWING NO.
C3B

REVISION:
D

ANTENNA LOADING SUMMARY										
ANTENNA POSITION	ANTENNA AZIMUTH	MECH. DT	ELEC. DT	LICENSED FREQUENCY	ANTENNA MODEL #	REMOTE RADIO UNIT	COMPOSITION CABLES			DIPLEXER MODEL #
							COAX QUANTITY	COAX SIZE	TOTAL HYBRID	
A1	0°	0°	4°	700 MHz	ANDREW LNX-6515DS-A1M	ERICSSON RRUS-B13	2	1-5/8"Ø	2	(2) COMMSCOPE CBC78-DF-2X
A2	0°	0°	2°	1900 MHz	ANDREW HBXX-6516DS-A2M	ERICSSON RRUS-32	-	-		
A3	0°	0°	2°	2100 MHz	ANDREW HBXX-6516DS-A2M	ERICSSON RRUS-32	-	-		
A4	0°	0°	4°	700 MHz	ANDREW LNX-6515DS-A1M	ERICSSON RRUS-B13	2	1-5/8"Ø		
B1	120°	0°	4°	700 MHz	ANDREW LNX-6515DS-A1M	ERICSSON RRUS-B13	2	1-5/8"Ø		(2) COMMSCOPE CBC78-DF-2X
B2	120°	0°	2°	1900 MHz	ANDREW HBXX-6516DS-A2M	ERICSSON RRUS-32	-	-		
B3	120°	0°	2°	2100 MHz	ANDREW HBXX-6516DS-A2M	ERICSSON RRUS-32	-	-		
B4	120°	0°	4°	700 MHz	ANDREW LNX-6515DS-A1M	ERICSSON RRUS-B13	2	1-5/8"Ø		
C1	240°	0°	4°	700 MHz	ANDREW LNX-6515DS-A1M	ERICSSON RRUS-B13	2	1-5/8"Ø		(2) COMMSCOPE CBC78-DF-2X
C2	240°	0°	2°	1900 MHz	ANDREW HBXX-6516DS-A2M	ERICSSON RRUS-32	-	-		
C3	240°	0°	2°	2100 MHz	ANDREW HBXX-6516DS-A2M	ERICSSON RRUS-32	-	-		
C4	240°	0°	4°	700 MHz	ANDREW LNX-6515DS-A1M	ERICSSON RRUS-B13	2	1-5/8"Ø		

NOTE: GC TO ADD RAYCAP (OVP) UNITS AND DIPLEXERS AS REQUIRED.

STRUCTURAL NOTES:

1. STRUCTURAL ANALYSIS PERFORMED BY OTHERS. CONTRACTOR TO COORDINATE WITH TOWER OWNER REPRESENTATIVE TO OBTAIN A COPY OF THE STRUCTURAL REPORT.
2. LINES AND ANTENNAS WORK SHALL NOT COMMENCE WITHOUT A PASSING STRUCTURAL REPORT IN HAND.

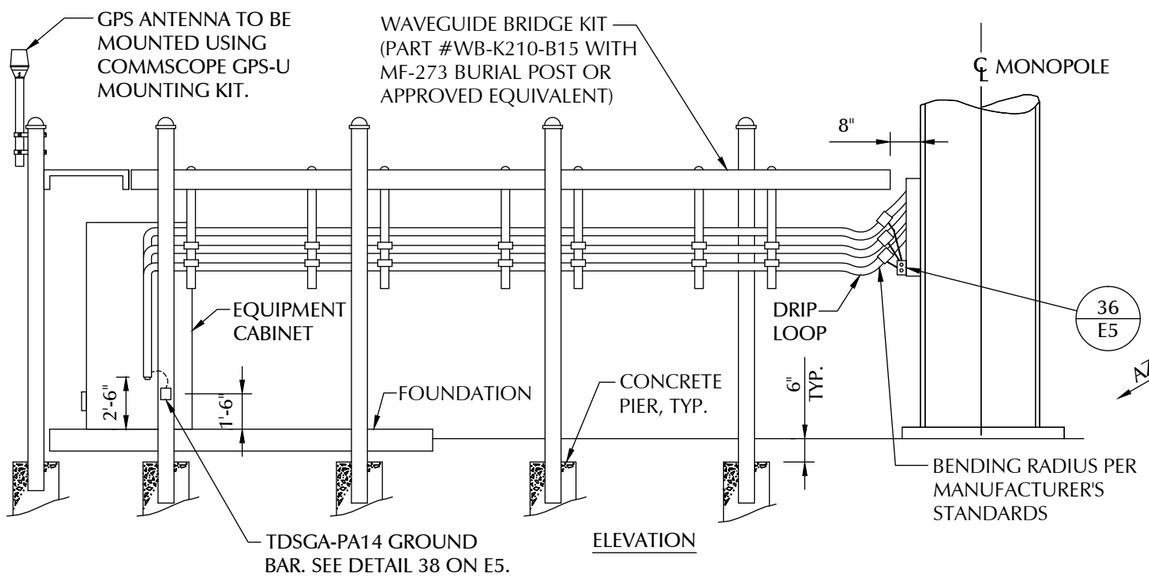

ICE BRIDGE AT MONOPOLE 12 / C2

NTS

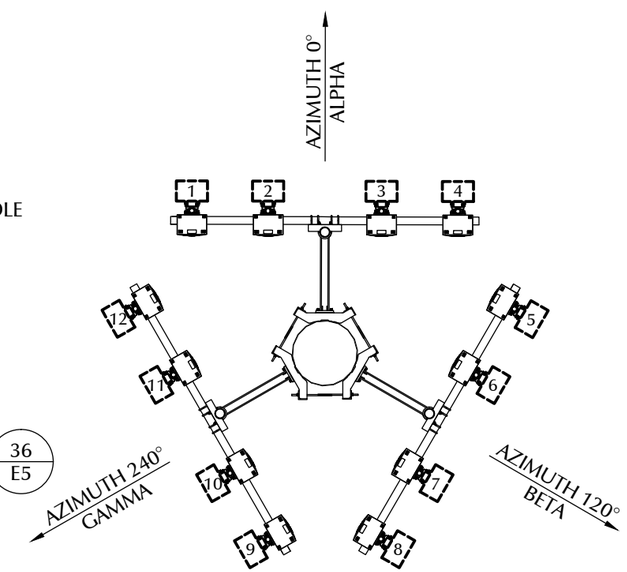

ANTENNA ORIENTATION PLAN 13 / --

NTS

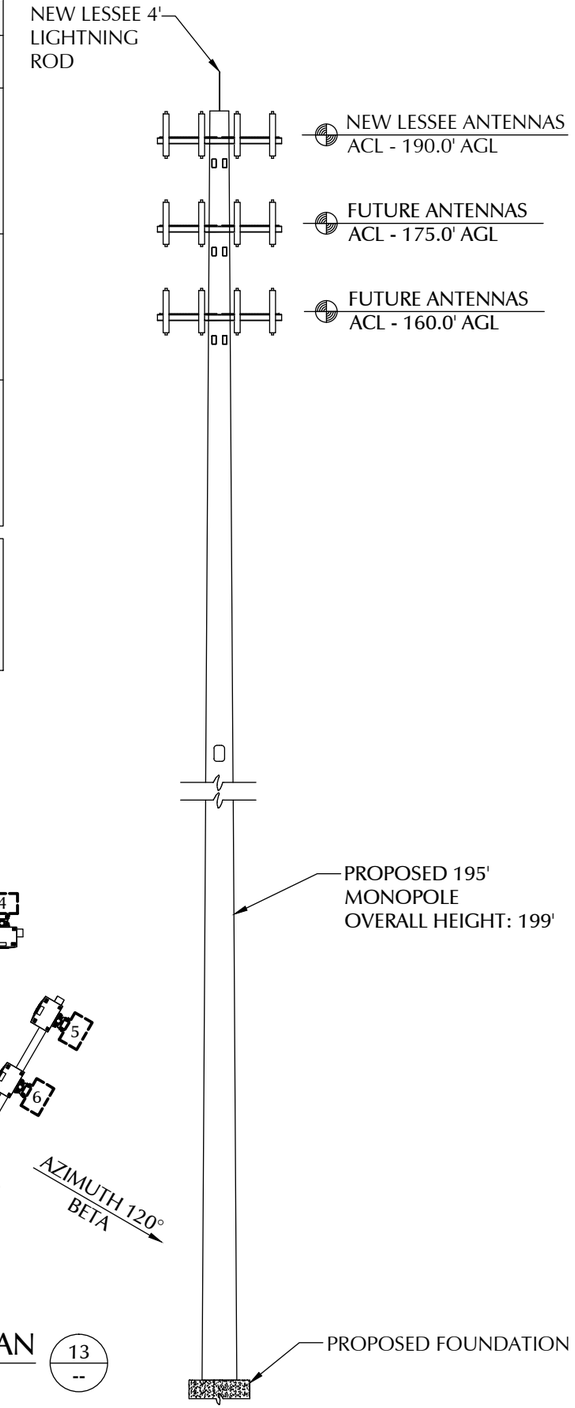

TOWER ELEVATION 5 / C1

NTS

LESSEE

TeleCAD Wireless
1961 NORTHPOINT BLVD, SUITE 130
HIXSON, TN 37343
PH: 423-843-9500
FAX: 423-843-9509

THE INFORMATION CONTAINED IN THIS SET OF DOCUMENTS IS PROPRIETARY BY NATURE. ANY USE OR DISCLOSURE OTHER THAN THAT WHICH RELATES TO THE CLIENT IS STRICTLY PROHIBITED.

A&E PROJECT #:	20171560879
DRAWN BY:	JSJ
CHECKED BY:	DMB

REVISIONS

NO.	DATE	BY	DESCRIPTION
D	12/5/17	CAD	PRELIMINARY REVIEW
C	11/22/17	CAD	PRELIMINARY REVIEW
B	11/01/17	CAD	PRELIMINARY REVIEW
A	08/29/17	JSJ	PRELIMINARY REVIEW

PROJECT No.	20171560879
SITE NAME:	BELWOOD
SITE NUMBER:	443107
SITE ADDRESS:	156 PETE MAUNEY ROAD LAWNDALE, NC 28090
DESIGN TYPE:	RAWLAND
SHEET TITLE:	SITE DETAILS
DRAWING NO.	C4
REVISION:	D

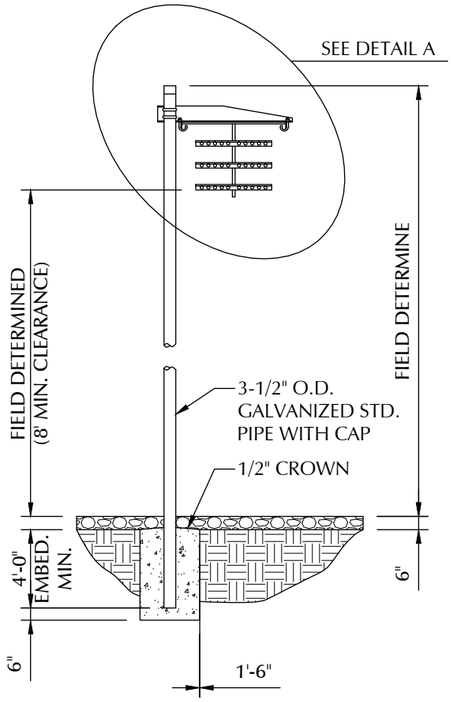

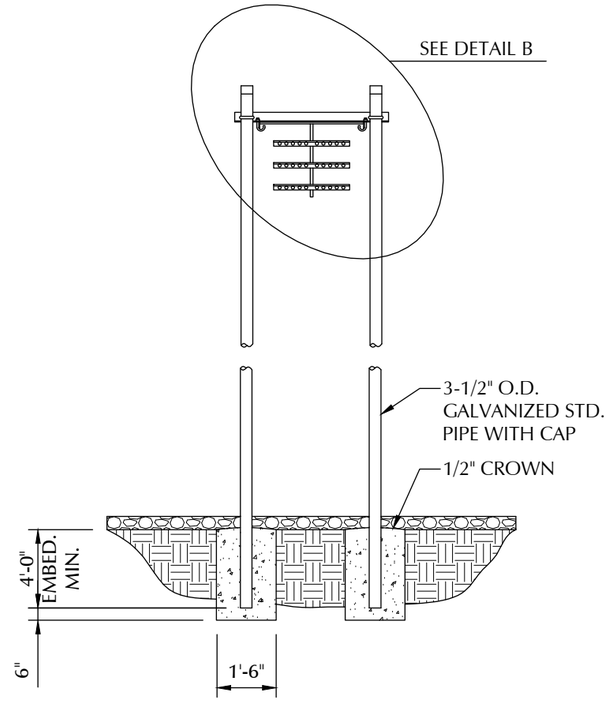

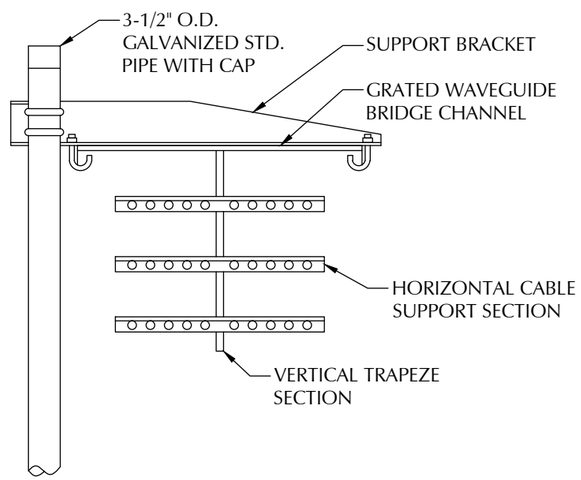

NOTE:
1. ALL MATERIALS FURNISHED BY CONTRACTOR UNLESS OTHERWISE NOTED

DETAIL A

ANDREW ONE POST WAVEGUIDE BRIDGE KIT
(PART #WB-K210-B15)

WAVEGUIDE BRIDGE DETAIL

NTS

8
--

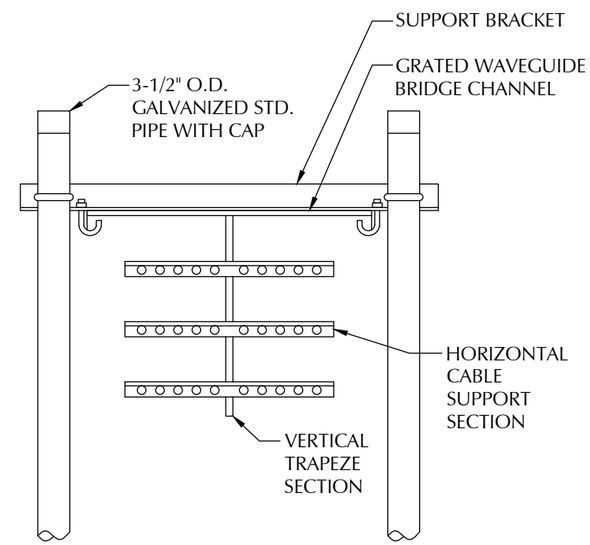

NOTE:
1. ALL MATERIALS FURNISHED BY CONTRACTOR UNLESS OTHERWISE NOTED

DETAIL B

ANDREW 2 POST WAVEGUIDE BRIDGE KIT
(PART #WB-K410-B15)

WAVEGUIDE BRIDGE DETAIL (ALTERNATE 2 POST DESIGN)

NTS

9
--

LESSEE

TeleCAD Wireless
1961 NORTHPOINT BLVD, SUITE 130
HIXSON, TN 37343
PH: 423-843-9500
FAX: 423-843-9509

THE INFORMATION CONTAINED IN THIS SET OF DOCUMENTS IS PROPRIETARY BY NATURE. ANY USE OR DISCLOSURE OTHER THAN THAT WHICH RELATES TO THE CLIENT IS STRICTLY PROHIBITED.

A&E PROJECT #:	20171560879
DRAWN BY:	JSJ
CHECKED BY:	DMB

REVISIONS

NO.	DATE	BY	DESCRIPTION
D	12/5/17	CAD	PRELIMINARY REVIEW
C	11/22/17	CAD	PRELIMINARY REVIEW
B	11/01/17	CAD	PRELIMINARY REVIEW
A	08/29/17	JSJ	PRELIMINARY REVIEW

PROJECT No.
20171560879

SITE NAME:
BELWOOD

SITE NUMBER:
443107

SITE ADDRESS:
156 PETE MAUNEY ROAD
LAWNDALE, NC 28090

DESIGN TYPE:
RAWLAND

SHEET TITLE:
SITE DETAILS

DRAWING NO.
C4A

REVISION:
D

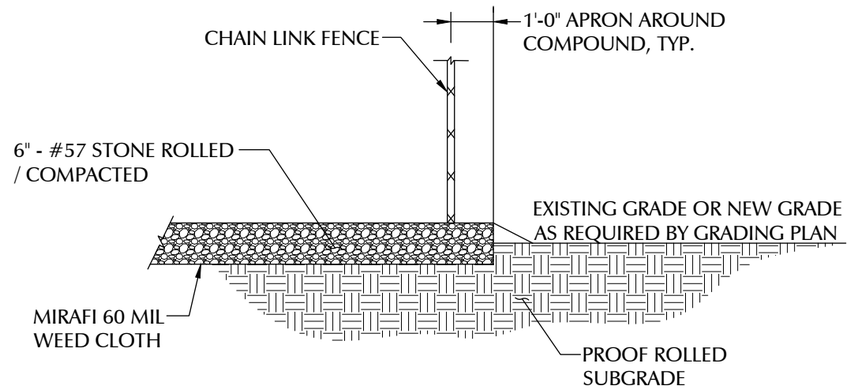

COMPOUND SURFACING

NTS

14 / C2

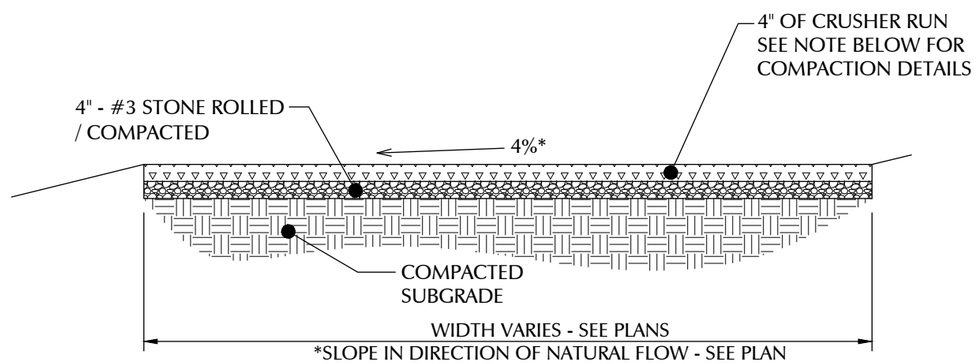

COMPACTION NOTE:
ALL AREAS TO RECEIVE FILL SHALL FIRST BE PROOF ROLLED UNDER THE SUPERVISION OF THE ENGINEER OR TESTING LAB PERSONNEL. ANY AREAS WHICH EXHIBIT "PUMPING" SHALL BE UNDERCUT (OR OTHERWISE STABILIZED) TO A FIRM SOIL BEFORE PLACING FILL. ALSO, ALL FINAL SUBBGRADES, WHETHER IN CUT OR FILL, SHALL BE PROOF ROLLED PRIOR TO CONSTRUCTING SLABS OR PAVEMENTS. CONTACT ENGINEER FOR DIRECTION IN SITUATIONS WHERE SOIL COMPACTION OR BEARING CAPACITY MAY BE INADEQUATE.

GRAVEL ACCESS ROAD & PARKING / TURNAROUND AREA

NTS

25 / C1A

LESSEE

TeleCAD Wireless
1961 NORTHPOINT BLVD, SUITE 130
HIXSON, TN 37343
PH: 423-843-9500
FAX: 423-843-9509

THE INFORMATION CONTAINED IN THIS SET OF DOCUMENTS IS PROPRIETARY BY NATURE. ANY USE OR DISCLOSURE OTHER THAN THAT WHICH RELATES TO THE CLIENT IS STRICTLY PROHIBITED.

A&E PROJECT #:	20171560879
DRAWN BY:	JSJ
CHECKED BY:	DMB

REVISIONS

NO.	DATE	BY	DESCRIPTION
D	12/5/17	CAD	PRELIMINARY REVIEW
C	11/22/17	CAD	PRELIMINARY REVIEW
B	11/01/17	CAD	PRELIMINARY REVIEW
A	08/29/17	JSJ	PRELIMINARY REVIEW

PROJECT No.
20171560879

SITE NAME:
BELWOOD

SITE NUMBER:
443107

SITE ADDRESS:
156 PETE MAUNEY ROAD
LAWNDALE, NC 28090

DESIGN TYPE:
RAWLAND

SHEET TITLE:
SITE DETAILS

DRAWING NO.: C5
REVISION: D

FOUNDATION GENERAL NOTES

1. WORK SHALL BE IN ACCORDANCE WITH LOCAL CODES, SAFETY REGULATIONS, AND UNLESS OTHERWISE NOTED, THE LATEST REVISION OF ACI 318, "BUILDING CODE REQUIREMENTS FOR REINFORCED CONCRETE." PROCEDURES FOR THE PROTECTION OF EXCAVATIONS, EXISTING CONSTRUCTION, AND UTILITIES SHALL BE ESTABLISHED PRIOR TO FOUNDATION INSTALLATION.
2. CONCRETE MATERIALS SHALL CONFORM TO THE APPROPRIATE STATE REQUIREMENTS FOR EXPOSED STRUCTURAL CONCRETE.
3. PROPORTIONS OF CONCRETE MATERIALS SHALL BE SUITABLE FOR THE INSTALLATION METHOD UTILIZED AND SHALL RESULT IN DURABLE CONCRETE FOR RESISTANCE TO LOCAL ANTICIPATED AGGRESSIVE ACTIONS. THE DURABILITY REQUIREMENTS OF ACI 318 CHAPTER 4 SHALL BE SATISFIED BASED ON THE CONDITIONS EXPECTED AT THE SITE. AS A MINIMUM, CONCRETE SHALL DEVELOP A MINIMUM COMPRESSIVE STRENGTH OF 3000 PSI IN 28 DAYS.
4. MAXIMUM SIZE OF CONCRETE AGGREGATE SHALL NOT EXCEED 1 INCH; SIZE SUITABLE FOR INSTALLATION METHOD UTILIZED; OR ONE-THIRD CLEAR DISTANCE BEHIND OR BETWEEN REINFORCING.
5. REINFORCEMENT SHALL BE DEFORMED AND CONFORM TO THE REQUIREMENTS OF ASTM A615 GRADE 60 UNLESS OTHERWISE NOTED.
6. WELDING IS PROHIBITED ON REINFORCING STEEL AND EMBEDMENTS.
7. MINIMUM CONCRETE COVER FOR REINFORCEMENT SHALL BE 3 INCHES UNLESS OTHERWISE NOTED.
8. CONCRETE COVER FROM TOP OF FOUNDATION TO ENDS OF VERTICAL REINFORCEMENT SHALL NOT EXCEED 3 INCHES NOR BE LESS THAN 2 INCHES.
9. ALL HORIZONTAL BARS IN WALLS & BEAM EDGES SHALL BE BENT AT CORNERS IN SUCH A WAY THAT CONTINUITY IS PROVIDED THROUGH THE JOINT. SEPARATE CORNER BARS OF THE SAME SIZE AND SPACING AS THE HORIZONTAL REINFORCING MAY BE SUBSTITUTED FOR THE BENT PORTION OF THE CONTINUOUS BARS.
10. FOUNDATION DESIGN ASSUMES STRUCTURAL BACKFILL TO BE COMPACTED IN 8 INCH MAXIMUM LAYERS TO 95% OF MAXIMUM DRY DENSITY AT OPTIMUM MOISTURE CONTENT IN ACCORDANCE WITH ASTM D698. ADDITIONALLY, STRUCTURAL BACKFILL MUST HAVE A MINIMUM COMPACTED UNIT WEIGHT OF 100 POUNDS PER CUBIC FOOT.
11. FOUNDATION DESIGN ASSUMES FIELD INSPECTIONS WILL BE PERFORMED TO VERIFY THAT CONSTRUCTION MATERIALS, INSTALLATION METHODS, AND ASSUMED DESIGN PARAMETERS ARE ACCEPTABLE BASED ON CONDITIONS EXISTING AT THE SITE.
12. LOOSE MATERIAL SHALL BE REMOVED FROM THE BOTTOM OF EXCAVATION PRIOR TO CONCRETE PLACEMENT.
13. CONCRETE SHALL BE PLACED IN A MANNER THAT WILL PREVENT SEGREGATION OF CONCRETE MATERIALS, INFILTRATION OF WATER OR SOIL, AND OTHER OCCURRENCES WHICH MAY DECREASE THE STRENGTH OR DURABILITY OF FOUNDATION.
14. CONCRETE SHALL BE PLACED AGAINST UNDISTURBED SOIL. WHEN FORMS ARE NECESSARY, THEY SHALL BE REMOVED PRIOR TO PLACING STRUCTURAL BACKFILL.
15. FOUNDATION DESIGN ASSUMES CONTINUOUS CONCRETE PLACEMENT WITHOUT CONSTRUCTION JOINTS.
16. WELDED WIRE FABRIC SHALL BE SUPPLIED IN FLAT SHEETS. (NOT ROLLED).
17. TEST CYLINDERS SHALL BE MOLDED AND LABORATORY CURED IN ACCORDANCE WITH ASTM C31. THREE CYLINDERS SHALL BE TAKEN FOR EACH DAY'S CONCRETE PLACEMENT. CYLINDERS SHALL BE TESTED IN ACCORDANCE WITH ASTM C39.
18. TOPS OF CONCRETE FOUNDATION MUST BE WITHIN 0.02" OF ELEVATION SPECIFIED BY THE CUSTOMER.
19. FASTEN PROPANE TANK SUPPORTS USING SIMPSON STRONG-TIE TITEN HD CONCRETE ANCHORS. MINIMUM ANCHOR DIAMETER IS 1/2"Ø. MINIMUM EMBEDMENT IS 2-1/2" AND MINIMUM CLEAR DISTANCE FROM ANCHOR TO EDGE OF CONCRETE IS 2". INSTALL ANCHOR IN STRICT ACCORDANCE WITH ANCHOR MANUFACTURER'S INSTALLATION INSTRUCTIONS. CONTRACTOR TO NOTIFY ENGINEER PRIOR TO PLACING PAD AND TANK IF ANCHOR REQUIREMENTS LISTED ABOVE CANNOT BE ACCOMMODATED DUE TO ACTUAL TANK PROCURED. CONTRACTOR MAY SUBMIT ALTERNATIVE ANCHOR PRODUCT FOR ENGINEER'S APPROVAL. SUBMITTAL SHALL INCLUDE ANCHOR TECHNICAL DATE AND ICC-ES AC193 APPROVAL FOR USE WITH CRACKED CONCRETE.
20. IF PROPANE TANK LOCATION IS WITHIN A FLOOD ZONE AND FLOOD ELEVATION WILL SUBMERGE ANY PORTION OF THE TANK INCREASE SLAB THICKNESS TO 12".

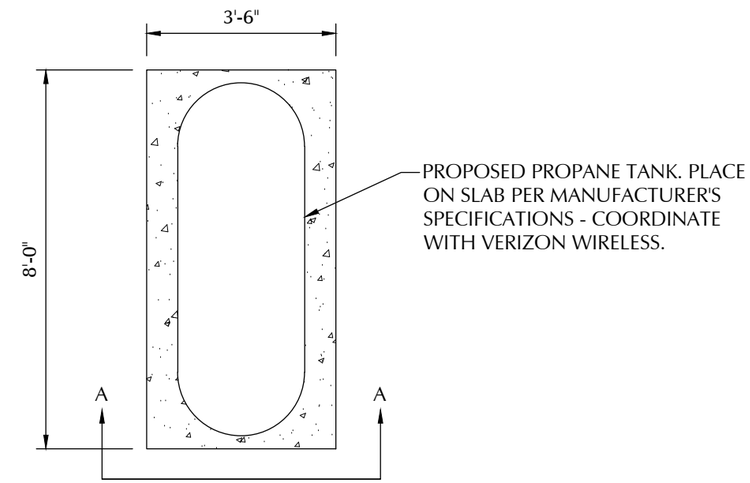

LP TANK SLAB FOUNDATION

NTS

2 / C2

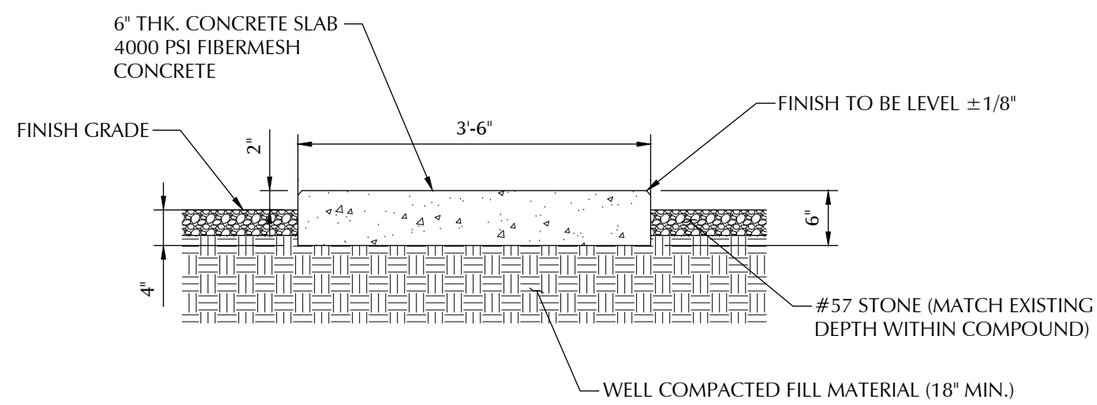

LP TANK SLAB FOUNDATION SECTION A-A

NTS

LESSEE

TeleCAD Wireless
1961 NORTHPOINT BLVD, SUITE 130
HIXSON, TN 37343
PH: 423-843-9500
FAX: 423-843-9509

THE INFORMATION CONTAINED IN THIS SET OF DOCUMENTS IS PROPRIETARY BY NATURE. ANY USE OR DISCLOSURE OTHER THAN THAT WHICH RELATES TO THE CLIENT IS STRICTLY PROHIBITED.

A&E PROJECT #:	20171560879
DRAWN BY:	JSJ
CHECKED BY:	DMB

REVISIONS

NO.	DATE	BY	DESCRIPTION
D	12/5/17	CAD	PRELIMINARY REVIEW
C	11/22/17	CAD	PRELIMINARY REVIEW
B	11/01/17	CAD	PRELIMINARY REVIEW
A	08/29/17	JSJ	PRELIMINARY REVIEW

PROJECT No.
20171560879

SITE NAME:
BELWOOD

SITE NUMBER:
443107

SITE ADDRESS:
156 PETE MAUNEY ROAD
LAWNDALE, NC 28090

DESIGN TYPE:
RAWLAND

SHEET TITLE:
SITE DETAILS

DRAWING NO.
C5A

REVISION:
D

EQUIPMENT NOTES

1. HORIZONTAL LIQUID PROPANE TANK WITH AN INTEGRAL MANUAL SHUTOFF VALVE. SIZE AND TYPE PER VERIZON WIRELESS. TANK SHALL COMPLY WITH ALL REQUIREMENTS OF THE NFPA AND INTERNATIONAL FUEL GAS CODE
2. FIRST STAGE REGULATOR PER NFPA 58 SECTION 6.8.1.1
3. 4" PVC CAP
4. PROPOSED VALVE, DRIP LEG, SECOND STAGE REGULATOR , AND FLEXIBLE CONNECTORS. ALL MATERIALS SHALL BE INSTALLED PER THE 2012 NORTH CAROLINA FUEL GAS CODE
5. PROPOSED GENERAC 35 KW PROPANE/NATURAL GAS GENERATOR.

CONDUIT, CONDUCTORS, & MISC. NOTES

6. 1" SCHEDULE 40 STEEL PIPE. PIPE MATERIAL TO COMPLY WITH SECTION 403.4.2 OF THE 2012 NORTH CAROLINA FUEL GAS CODE. PIPE SIZED OR AN INLET PRESSURE OF 11" IN W.C.I. AND A MAXIMUM LENGTH OF 50 L.F.
7. 1" POLYETHYLENE PIPE WITH A TRACER WIRE. PIPE MATERIAL TO COMPLY WITH SECTION 403.6 OF THE 2012 NORTH CAROLINA FUEL GAS CODE. PIPE SIZED OR AN INLET PRESSURE OF 11" IN W.C. AND A MAXIMUM LENGTH OF 50 L.F. TRACER WIRE SHALL COMPLY WITH SECTION 404.17.3 OF 2012 NORTH CAROLINA FUEL GAS CODE.
8. 4" SCHEDULE 80 PVC SLEEVE

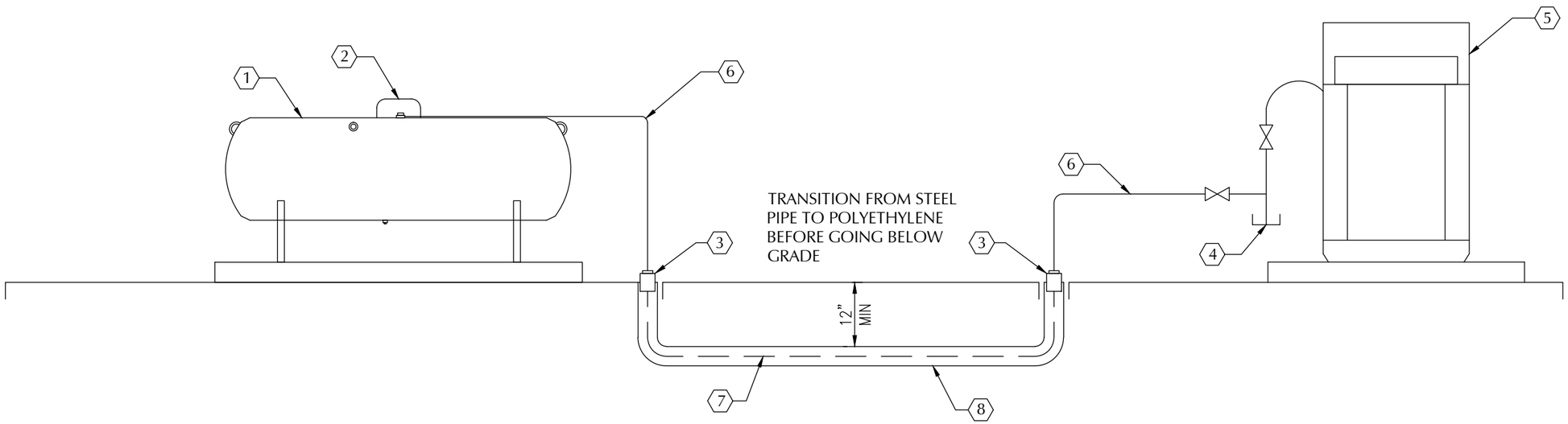

MECHANICAL PLAN & DETAILS (3 / C2)

NTS

ADDITIONAL NOTES

1. UPON COMPLETION OF ASSEMBLY, PIPING SYSTEMS (INCLUDING HOSE) SHALL BE TESTED AND PROVED FREE OF LEAKS IN ACCORDANCE WITH SECTION 406 OF THE 2012 NORTH CAROLINA FUEL GAS CODE.
2. GENERATOR SUPPLY LINE UPSTREAM OF SECOND STAGE REGULATOR SIZED FOR 632K BTU AT 30 FEET MAXIMUM PIPING LENGTH. LINES SIZED PER TABLES 402.4(28) & 402.4(35) OF THE 2012 NORTH CAROLINA FUEL GAS CODE. IF THE INSTALLATION OF THE SERVICE LINE CANNOT BE MADE WITHIN 30 FEET, THE CONTRACTOR SHALL CONTACT THE ENGINEER PRIOR TO ORDERING MATERIALS TO RECEIVE DIRECTION.
3. COORDINATE ALL ROUTING WITH OTHER TRADES SHOWN ON CIVIL AND ELECTRICAL DRAWINGS.

LESSEE

TeleCAD Wireless
1961 NORTHPOINT BLVD, SUITE 130
HIXSON, TN 37343
PH: 423-843-9500
FAX: 423-843-9509

THE INFORMATION CONTAINED IN THIS SET OF DOCUMENTS IS PROPRIETARY BY NATURE. ANY USE OR DISCLOSURE OTHER THAN THAT WHICH RELATES TO THE CLIENT IS STRICTLY PROHIBITED.

A&E PROJECT #:	20171560879
DRAWN BY:	JSJ
CHECKED BY:	DMB

REVISIONS

NO.	DATE	BY	DESCRIPTION
D	12/5/17	CAD	PRELIMINARY REVIEW
C	11/22/17	CAD	PRELIMINARY REVIEW
B	11/01/17	CAD	PRELIMINARY REVIEW
A	08/29/17	JSJ	PRELIMINARY REVIEW

PROJECT No.: 20171560879

SITE NAME: BELWOOD

SITE NUMBER: 443107

SITE ADDRESS: 156 PETE MAUNEY ROAD LAWNDALE, NC 28090

DESIGN TYPE: RAWLAND

SHEET TITLE: SITE DETAILS

DRAWING NO.: C5B

REVISION: D

EROSION CONTROL NOTES:

1. CLEARING AND GRUBBING SHALL NOT BE INITIATED MORE THAN 10 CALENDAR DAYS PRIOR TO GRADING OR EARTH MOVING ACTIVITIES UNLESS THE AREA IS TEMPORARILY SEEDED.
2. ALL DISTURBED AREAS SHALL BE PROPERLY STABILIZED AS SOON AS PRACTICABLE.
3. EROSION AND SEDIMENT CONTROL MEASURES SHALL BE INSTALLED CONCURRENT WITH CLEARING OPERATIONS. AND SHALL BE FUNCTIONAL PRIOR TO ANY EARTH MOVING OPERATIONS.
4. CONSTRUCTION SHALL BE SEQUENCED TO MINIMIZE THE EXPOSURE TIME OF GRADED SOIL AREAS AND SHALL BE PHASED FOR PROJECTS THAT HAVE OVER 50 ACRES OF SOIL DISTURBANCE. HOWEVER, PRIORITY SHALL BE GIVEN TO FINISHING OPERATIONS AND PERMANENT EROSION CONTROL MEASURES OVER TEMPORARY EROSION CONTROL MEASURES ON ALL PROJECTS.
5. SOIL MATERIALS MUST BE PREVENTED FROM ENTERING WATERS OF THE STATE / U.S. EROSION AND SEDIMENTATION CONTROL MEASURES TO PROTECT WATER QUALITY MUST BE MAINTAINED THROUGHOUT THE CONSTRUCTION PERIOD. SILT FENCE MUST BE INSTALLED ALONG THE BASE OF ALL FILLS AND CUTS. ON THE DOWNHILL SIDE OF STOCKPILED SOIL. AND ALONG STREAM BANKS IN CLEARED AREAS TO PREVENT SEDIMENT MIGRATION IN TO STREAMS. THEY MUST BE INSTALLED ON THE CONTOUR, ENTRENCHED AND STAKED, AND EXTEND THE WIDTH OF THE AREA TO BE CLEARED.
6. CHECK DAMS SHALL BE UTILIZED WHERE RUNOFF IS CONCENTRATED. CLEAN ROCK, BRUSH, SANDBAG, OR CHECK DAMS SHALL BE PROPERLY CONSTRUCTED TO DETAIN RUNOFF AND TRAP SEDIMENT. CLEAN ROCK IS ROCK OF VARIOUS TYPE AND SIZE, DEPENDING UPON APPLICATION, THAT CONTAINS NO FINES, SOILS, OR OTHER WASTES OR CONTAMINANTS.
7. TEMPORARY OR PERMANENT SOIL STABILIZATION SHALL BE ACCOMPLISHED WITHIN 15 DAYS AFTER FINAL GRADING OR OTHER EARTHWORK. PERMANENT SOIL STABILIZATION SHALL REPLACE TEMPORARY STABILIZATION AS SOON AS PRACTICABLE.
8. THE CONTRACTOR SHALL INSTALL A RAIN GAUGE ON-SITE AND MAINTAIN IT IN GOOD WORKING CONDITION. THE CONTRACTOR SHALL RECORD DAILY PRECIPITATION ON THE PROJECT AND PROVIDE THIS INFORMATION TO THE ENGINEER ON A MONTHLY BASIS.
9. INSPECTIONS OF EROSION AND SEDIMENT CONTROL MEASURES SHALL BE DONE BEFORE ANTICIPATED STORM EVENTS (OR SERIES OF STORM EVENTS SUCH AS INTERMITTENT SHOWERS OVER ONE OR MORE DAYS) AND WITHIN 24 HOURS AFTER THE END OF A STORM EVENT OF 0.5 INCHES OR GREATER, AND AT LEAST TWICE PER WEEK, 72 HOURS APART. THE RECORD OF INSPECTIONS MUST BE RETAINED ON SITE DURING THE DURATION OF THE PROJECT.
10. OUTFALL POINTS SHALL BE INSPECTED TO ASCERTAIN WHETHER EROSION AND SEDIMENT CONTROL MEASURES ARE EFFECTIVE IN PREVENTING IMPACTS TO SURROUNDING WATERS. LOCATIONS WHERE VEHICLES ENTER AND EXIT THE SITE SHALL BE INSPECTED FOR EVIDENCE OF OFF-SITE ROADWAY SEDIMENT TRACKING.
11. UPON CONCLUSION OF THE INSPECTIONS, EROSION AND SEDIMENT CONTROL MEASURE FOUND TO BE INEFFECTIVE SHALL BE REPAIRED, REPLACED, OR MODIFIED BEFORE THE NEXT RAIN EVENT, IF POSSIBLE, BUT IN NO CASE MORE THAN SEVEN DAYS AFTER THE CONDITION IS IDENTIFIED.
12. THE CONTRACTOR SHALL MAINTAIN A COPY OF THE STORM WATER POLLUTION PREVENTION PLAN ON-SITE (OR AT A NEARBY OFFICE).
13. THE OPERATION OF EQUIPMENT IN WATERS OF THE STATE / U.S., INCLUDING WETLANDS, SHALL BE ONLY AS SHOWN ON THE PROJECT PLANS AND/OR AS SO SPECIFIED IN THE ARAP AND/OR SECTION 404 PERMIT (S). ANY ADDITIONAL PERMITS REQUIRED BY THE CONTRACTOR'S METHOD OF OPERATION, SHALL BE THE RESPONSIBILITY OF THE CONTRACTOR TO OBTAIN.
14. EXCAVATION AND FILL ACTIVITIES SHALL BE SEPARATED FROM FLOWING WATERS. ALL SURFACE WATER FLOWING TOWARD THE EXCAVATION OR FILL WORK SHALL BE DIVERTED THROUGH UTILIZATION OF COFFERDAMS, BERMS, OR TEMPORARY CHANNELS. TEMPORARY DIVERSION CHANNELS MUST BE PROTECTED BY NON-ERODIBLE MATERIAL AND LINED TO THE EXPECTED HIGH WATER LEVEL. COFFERDAMS MUST BE CONSTRUCTED OF SANDBAGS, CLEAN ROCK, STEEL SHEETING OR OTHER NON-ERODIBLE MATERIAL. CLEAN ROCK IS ROCK OF VARIOUS TYPE AND SIZE, DEPENDING UPON APPLICATION, THAT CONTAINS NO FINES, SOILS, OR OTHER WASTES OR CONTAMINANTS.
15. THE CONTRACTOR SHALL ESTABLISH AND MAINTAIN A PROACTIVE METHOD TO PREVENT LITTER, CONSTRUCTION DEBRIS, AND CONSTRUCTION CHEMICALS FROM ENTERING WATERS OF STATE / U.S.
16. THE CONTRACTOR SHALL TAKE APPROPRIATE STEPS TO ENSURE THAT PETROLEUM PRODUCTS OR OTHER CHEMICAL POLLUTANTS ARE PREVENTED FROM ENTERING WATERS STATE / U.S. ALL EQUIPMENT REFUELING, SERVICING, AND STAGING AREAS SHALL COMPLY WITH ALL LOCAL, STATE, AND FEDERAL LAWS, RULES, REGULATIONS, AND ORDINANCES: INCLUDING THOSE OF THE NATIONAL FIRE PROTECTION ASSOCIATION (NFPA). APPROPRIATE CONTAINMENT MEASURE FOR THESE AREAS SHALL BE UTILIZED. ALL SPILLS MUST BE REPORTED TO THE APPROPRIATE AGENCY, AND MEASURE SHALL BE TAKES IMMEDIATELY TO PREVENT THE POLLUTION OF WATERS OF THE STATE/U.S., INCLUDING GROUNDWATER, SHOULD A SPILL OCCUR.
17. BORROW AND WASTE DISPOSAL AREAS SHALL BE LOCATED IN NON-WETLAND AREAS AND ABOVE THE 100-YEAR, FEDERAL EMERGENCY MANAGEMENT AGENCY FLOODPLAIN. BORROW AND WASTE DISPOSAL AREAS SHALL NOT AFFECT ANY WATERS OF THE STATE / U.S. UNLESS THESE AREAS ARE SPECIFICALLY COVERED BY AN ARAP, 404, OR NPOES PERMIT, OBTAINED SOLELY BY THE CONTRACTOR.
18. WETLAND AREAS SHALL NOT BE USED AS EQUIPMENT STORAGE, STAGING, OR TRANSPORTATION AREAS, UNLESS PROVIDED FOR IN THE PLANS.
19. ANY DISAGREEMENT BETWEEN THE PROJECT PLANS, THE PROJECT AS CONSTRUCTED AND THE PERMIT OR PERMITS ISSUED FOR THE PROJECT, SHALL BE BROUGHT TO THE ATTENTION OF THE ENGINEER. THE ENGINEER SHALL DECIDE WHICH HAS PRECEDENCE AND WHETHER PERMIT OR PLANS REVISIONS ARE NEEDED. IN GENERAL, PERMIT CONDITIONS WILL PREVAIL.
20. THE EROSION AND SEDIMENT CONTROL MEASURE AND/OR PLAN SHALL BE MODIFIED AS NECESSARY SO THAT THEY ARE EFFECTIVE AT ALL TIMES THROUGHOUT THE COURSE OF THE PROJECT.
21. FOR THE INSTALLATION OF BURIED UTILITIES (PIPES AND CABLES), TRENCHES SHALL BE BACKFILLED DAILY AS CONSTRUCTION PROCEEDS. BACKFILLED TRENCHES SHALL BE SEEDED AND MULCHED OR SODDED DAILY IF POSSIBLE, BUT NO LATER THAN SEVEN (7) DAYS AFTER TRENCHING. ANY TEMPORARY SPOIL PILE OF EXCAVATED EARTH SHALL BE LOCATED WITHIN THE PROJECT EROSION CONTROL MEASURES ARE NOT BACKFILLED OVERNIGHT. APPROPRIATE EROSION CONTROL AND SAFETY MEASURE WILL BE INSTALLED UNTIL SUCH TIME AS THE TRENCH IS BACKFILLED.

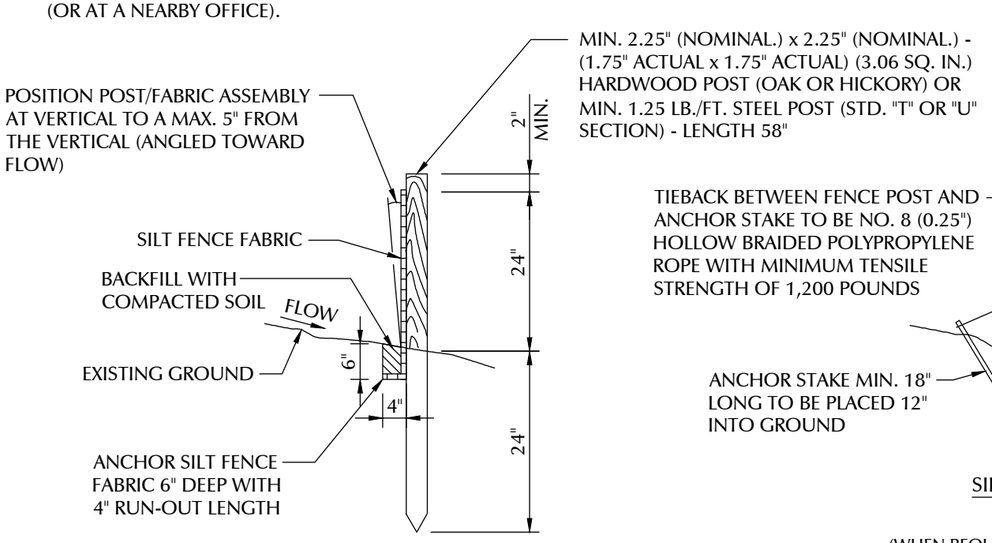

SECTIONAL VIEW

SILT FENCE DETAIL

NTS

15
C1A

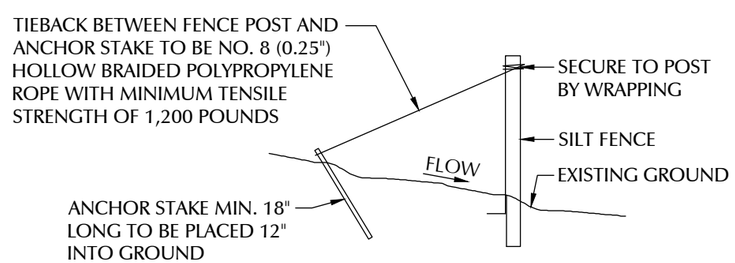

SILT FENCE TIEBACK FOR STEEL POSTS OR WOOD POSTS

(WHEN REQUIRED BY THE ENGINEER OR NOTED IN THE PLANS. COST TO BE INCLUDED IN THE ITEMS FOR SILT FENCE)

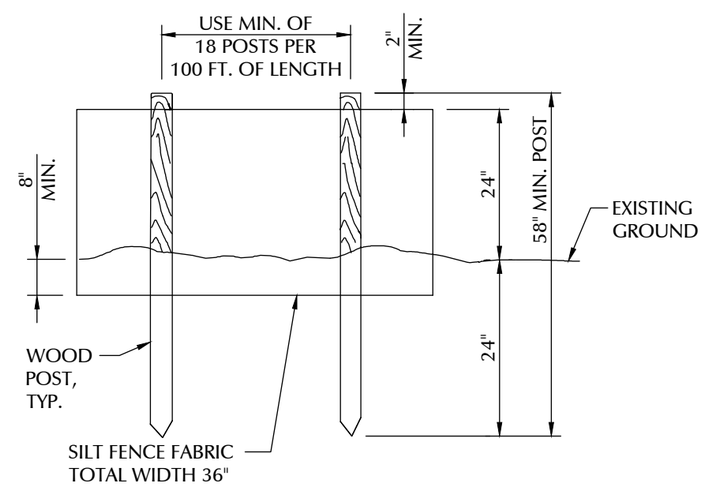

ELEVATION VIEW

LESSEE

TeleCAD Wireless
1961 NORTHPOINT BLVD, SUITE 130
HIXSON, TN 37343
PH: 423-843-9500
FAX: 423-843-9509

THE INFORMATION CONTAINED IN THIS SET OF DOCUMENTS IS PROPRIETARY BY NATURE. ANY USE OR DISCLOSURE OTHER THAN THAT WHICH RELATES TO THE CLIENT IS STRICTLY PROHIBITED.

A&E PROJECT #:	20171560879
DRAWN BY:	JSJ
CHECKED BY:	DMB

REVISIONS

NO.	DATE	BY	DESCRIPTION
D	12/5/17	CAD	PRELIMINARY REVIEW
C	11/22/17	CAD	PRELIMINARY REVIEW
B	11/01/17	CAD	PRELIMINARY REVIEW
A	08/29/17	JSJ	PRELIMINARY REVIEW

PROJECT No.
20171560879

SITE NAME:
BELWOOD

SITE NUMBER:
443107

SITE ADDRESS:
156 PETE MAUNEY ROAD
LAWNDALE, NC 28090

DESIGN TYPE:
RAWLAND

SHEET TITLE:
SITE DETAILS

DRAWING NO.
C5C

REVISION:
D

TYPICAL CHAIN LINK FENCING NOTES

(INSTALL FENCING PER ASTM F-567, SWING GATES PER ASTM F-900)

1. GATE POST, CORNER, TERMINAL OR PULL POST SHALL BE 3"Ø SCHEDULE 40 FOR GATE WIDTHS UP THRU 7 FEET OR 14 FEET FOR DOUBLE SWING GATE PER ASTM-F1083.
2. LINE POST: 2"Ø SCHEDULE 40 PIPE PER ASTM-F1083. INSTALL EVERY 10' ALONG FENCE LINE.
3. GATE FRAME: 1 1/2"Ø SCHEDULE 40 PIPE, STEEL , HOT-DIPPED ZINC COATED (GALVANIZED) WELDED STEEL PIPE PER ASTM-F1083 .
4. TOP RAIL & BRACE RAIL: 1 5/8"Ø SCHEDULE 40 PIPE PER ASTM-F1083.
5. CHAIN LINK FABRIC: 9 GA. MIN. CORE WIRE SIZE 2" MESH, CONFORMING TO ASTM-A392.
6. TIE WIRE: MINIMUM 11 GA GALVANIZED STEEL INSTALL A SINGLE WRAP TIE WIRE AT POSTS AND RAILS AT MAX. 24" INTERVALS. INSTALL HOG RINGS ON TENSION WIRE AT 24" INTERVALS.
7. TENSION WIRE: 7 GA. GALVANIZED STEEL .
8. BARBED WIRE: DOUBLE STRAND 12-1/2 GAUGE TWISTED WIRE, 4 PT. BARBS SPACED ON APPROXIMATELY 5" CENTERS. (IF USED)
9. GATE LATCH: 1-3/8" O.D. PLUNGER ROD W/ MUSHROOM TYPE CATCH.
10. LOCAL ORDINANCE FOR BARBED WIRE PERMIT SHALL GOVERN INSTALLATION.
11. HEIGHT = 8' VERTICAL + 1' BARBED WIRE VERTICAL DIMENSION. WORK WITH SPECIFICATION 2831.
12. EXTENSION ARMS TO BE PLACED ON ALL LINE POSTS NOT TO INCLUDE GATE POSTS AND CORNER POSTS.

CHECK LOCAL CODES FOR BARBED WIRE REQUIREMENTS.

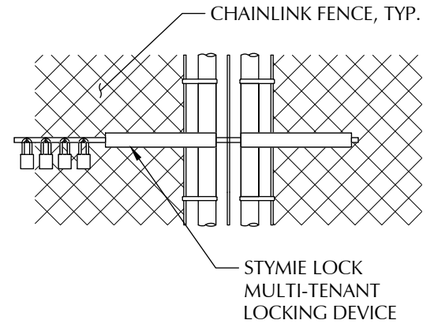

FENCE LOCK DETAIL

NTS

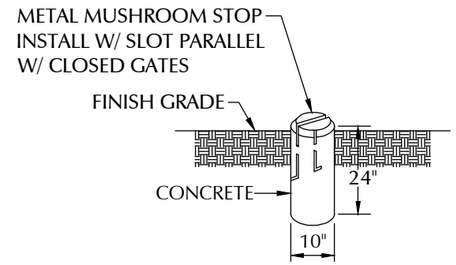

MUSHROOM STOP (20 / C2)

NTS

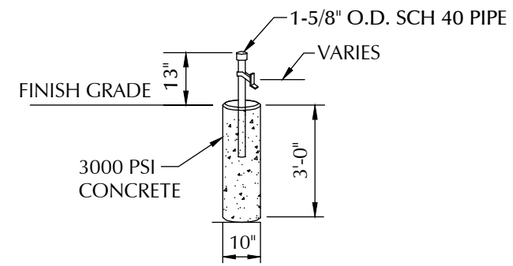

GATE STOP DETAIL (21 / C2)

NTS

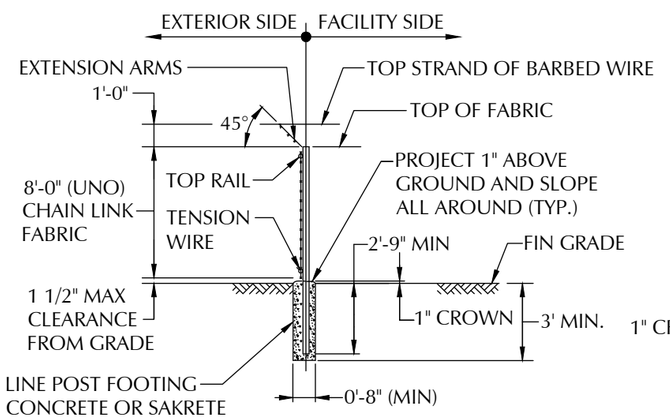

TYPICAL SECTION

CHAIN LINK FENCE (17 / C2)

NTS

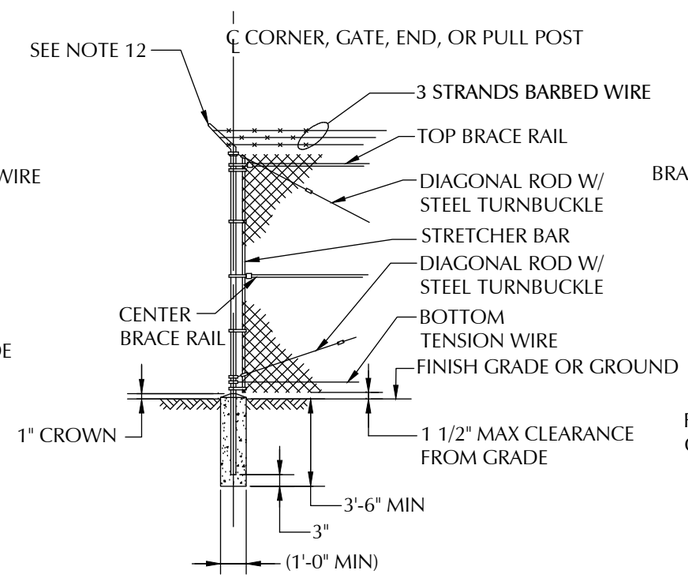

CHAIN LINK CORNER, GATE, END, OR PULL POST (18 / C2)

NTS

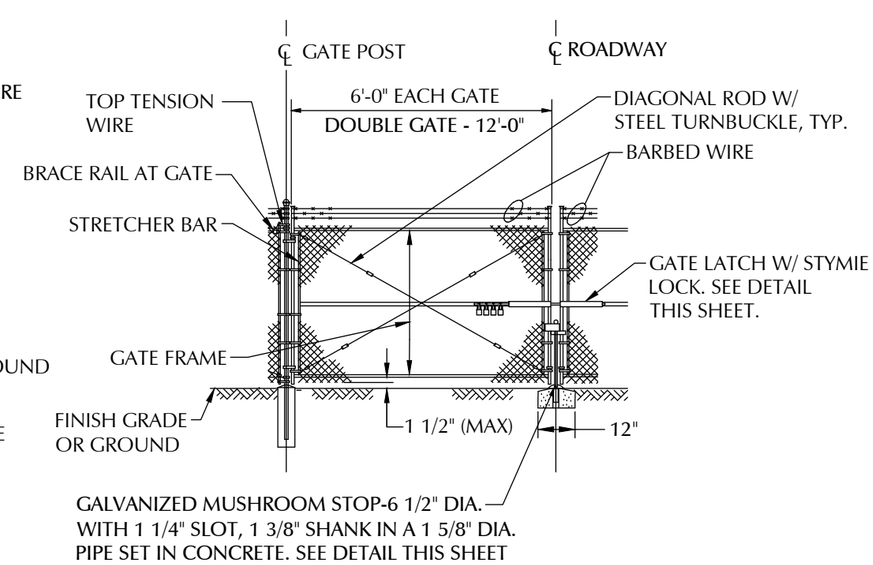

CHAIN LINK DOUBLE GATE (19 / C2)

NTS

LESSEE

TeleCAD Wireless
1961 NORTHPOINT BLVD, SUITE 130
HIXSON, TN 37343
PH: 423-843-9500
FAX: 423-843-9509

THE INFORMATION CONTAINED IN THIS SET OF DOCUMENTS IS PROPRIETARY BY NATURE. ANY USE OR DISCLOSURE OTHER THAN THAT WHICH RELATES TO THE CLIENT IS STRICTLY PROHIBITED.

A&E PROJECT #:	20171560879
DRAWN BY:	JSJ
CHECKED BY:	DMB

REVISIONS

NO.	DATE	BY	DESCRIPTION
D	12/5/17	CAD	PRELIMINARY REVIEW
C	11/22/17	CAD	PRELIMINARY REVIEW
B	11/01/17	CAD	PRELIMINARY REVIEW
A	08/29/17	JSJ	PRELIMINARY REVIEW

PROJECT No.
20171560879

SITE NAME:
BELWOOD

SITE NUMBER:
443107

SITE ADDRESS:
156 PETE MAUNEY ROAD
LAWNDALE, NC 28090

DESIGN TYPE:
RAWLAND

SHEET TITLE:
FENCE DETAILS

DRAWING NO.
C6

REVISION:
D

PLANTING SCHEDULE

QTY	BOTANICAL NAME	COMMON NAME	CALIPER	TYPE	SPACING	PLANTING HEIGHT	PLANTING WIDTH	MATURE HEIGHT	MATURE SPREAD	SUNLIGHT	SOIL CONDITIONS	SYMBOL	REMARKS
30	X Cupressocyparis leylandii	Leyland Cypress	N/A	UNDERSTORY EVERGREEN	10'	6 FT	N/A	25-50 FT	10 FT	FULL OR PARTIAL	ADAPTABLE		FULL TO BASE

LANDSCAPE NOTES:

1. ALL PLANT MATERIAL SHALL CONFORM TO THE STANDARDS SET FORTH THE CURRENT EDITION OF AMERICAN STANDARDS FOR NURSERY STOCK OF NURSERYMEN.
2. PLANTING PLAN TAKES PRECEDENCE OVER PLANT LIST.
3. ALL TREES SHALL BE STAKED OR GUYED AT TIME OF PLANTING UNLESS NO STAKES IS PRE-APPROVED BY OWNER. STAKES OR GUYS SHALL NOT RESTRICT MOVEMENT OF THE PLANT, BUT SHALL HAVE 2"-3" OF SLACK IN EACH GUY WIRE.
4. ALL PLANT MATERIAL IS SUBJECT TO THE OWNERS APPROVAL PRIOR TO INSTALLATION TO INSURE THE CONFORMITY TO THE SPECIFICATIONS.
5. APPLY GRANULAR PRE-EMERGENT HERBICIDE TO SOIL PER MANUFACTURERS RECOMMENDATIONS BELOW MULCH BED PRIOR TO MULCH APPLICATION.
6. APPLY "LESCO" (OR EQUAL) GRANULAR SLOW RELEASE FERTILIZER PER MANUFACTURERS RECOMMENDATIONS TO TREES AT TIME OF PLANTING.
7. PLACE 3"-4" MIN. THICKNESS OF SHREDDED BROWN HARDWOOD MULCH 10' WIDE AROUND FENCED AREA AS SHOWN ON PLAN. IF NECESSARY, INSTALL METAL OR PVC EDGING STRIPS TO PREVENT MULCH FROM WASHING ONTO ROAD OR OTHERWISE CAUSING PROBLEMS.
8. CONTRACTOR SHALL WARRANTY PLANTS FOR A PERIOD OF 1 YEAR AFTER FINAL ACCEPTANCE.

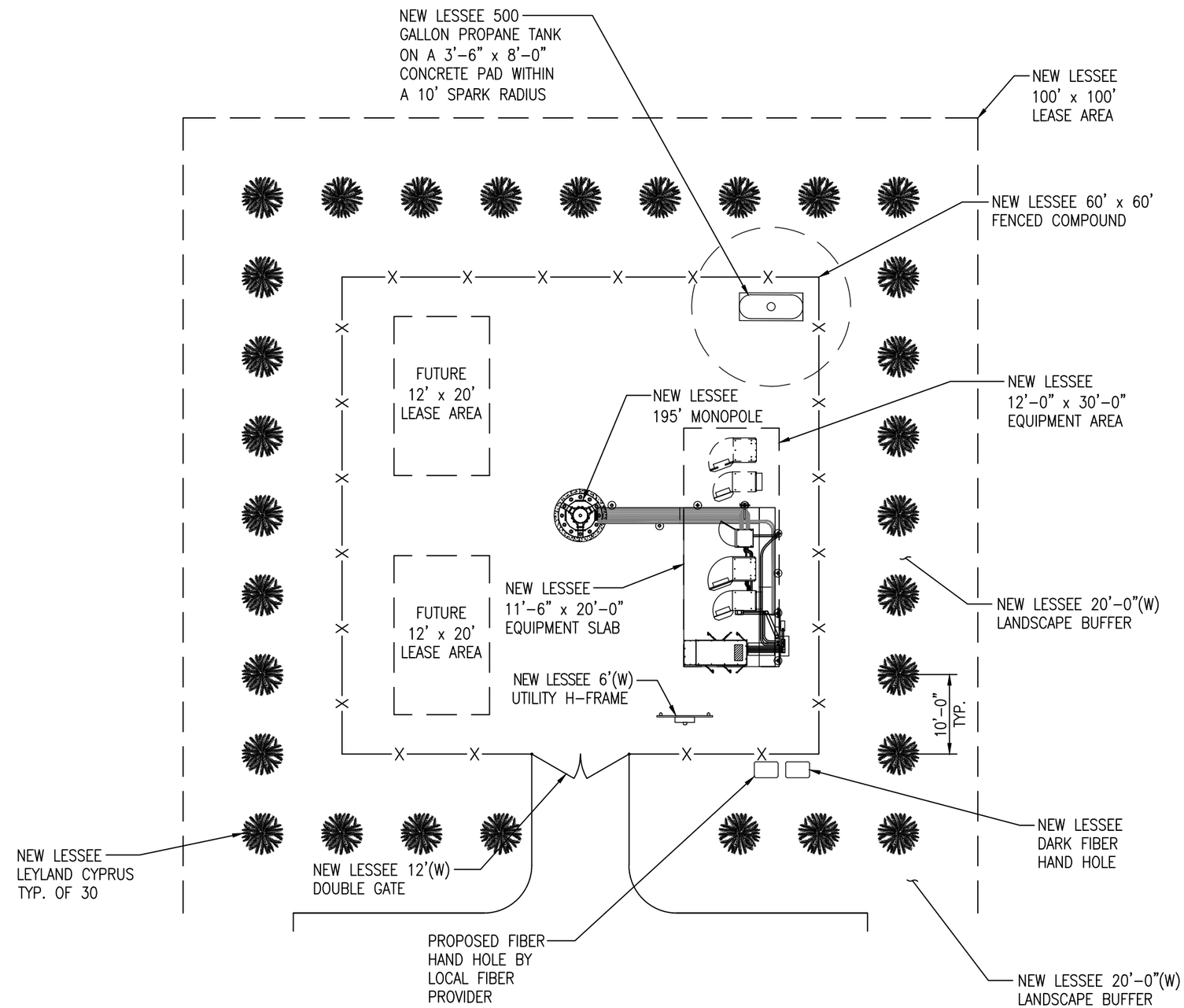

0' 15' 30' 45'

SCALE: 1" = 15'

LESSEE

TeleCAD Wireless
1961 NORTHPOINT BLVD, SUITE 130
HIXSON, TN 37343
PH: 423-843-9500
FAX: 423-843-9509

THE INFORMATION CONTAINED IN THIS SET OF DOCUMENTS IS PROPRIETARY BY NATURE. ANY USE OR DISCLOSURE OTHER THAN THAT WHICH RELATES TO THE CLIENT IS STRICTLY PROHIBITED.

A&E PROJECT #:	20171560879
DRAWN BY:	JSJ
CHECKED BY:	DMB

REVISIONS

NO.	DATE	BY	DESCRIPTION
D	12/5/17	CAD	PRELIMINARY REVIEW
C	11/22/17	CAD	PRELIMINARY REVIEW
B	11/01/17	CAD	PRELIMINARY REVIEW
A	08/29/17	JSJ	PRELIMINARY REVIEW

PROJECT No.: 20171560879

SITE NAME: BELWOOD

SITE NUMBER: 443107

SITE ADDRESS: 156 PETE MAUNEY ROAD LAWNDALE, NC 28090

DESIGN TYPE: RAWLAND

SHEET TITLE: LANDSCAPE PLAN

DRAWING NO.: L1

REVISION: D

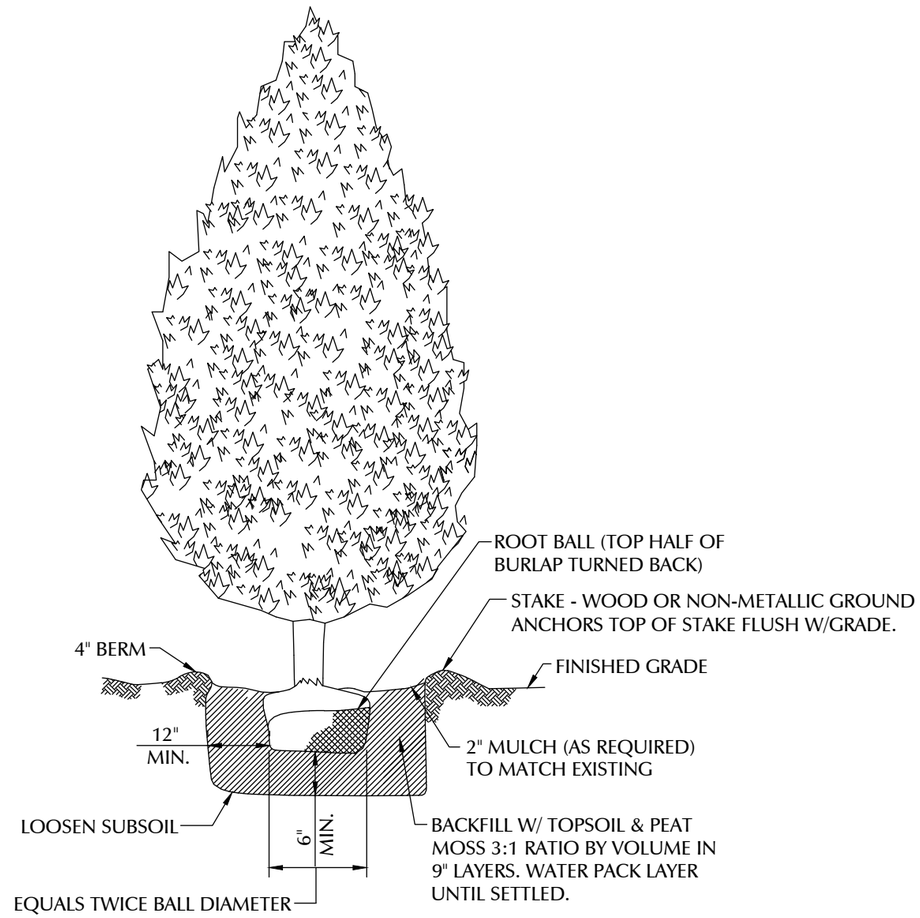

EVERGREEN TREE

NOTES:

1. EVERGREEN TREE SHALL BE MIN. 6'-0" IN HEIGHT AT TIME OF PLANTING.
2. EVERGREEN SHRUB SHALL BE A MIN. 5'-0" (H) x 5'-0" (W) AT TIME OF PLANTING

LESSEE

TeleCAD Wireless
1961 NORTHPOINT BLVD, SUITE 130
HIXSON, TN 37343
PH: 423-843-9500
FAX: 423-843-9509

THE INFORMATION CONTAINED IN THIS SET OF DOCUMENTS IS PROPRIETARY BY NATURE. ANY USE OR DISCLOSURE OTHER THAN THAT WHICH RELATES TO THE CLIENT IS STRICTLY PROHIBITED.

A&E PROJECT #:	20171560879
DRAWN BY:	JSJ
CHECKED BY:	DMB

REVISIONS

NO.	DATE	BY	DESCRIPTION
D	12/5/17	CAD	PRELIMINARY REVIEW
C	11/22/17	CAD	PRELIMINARY REVIEW
B	11/01/17	CAD	PRELIMINARY REVIEW
A	08/29/17	JSJ	PRELIMINARY REVIEW

PROJECT No.
20171560879

SITE NAME:
BELWOOD

SITE NUMBER:
443107

SITE ADDRESS:
156 PETE MAUNEY ROAD
LAWNDALE, NC 28090

DESIGN TYPE:
RAWLAND

SHEET TITLE:
LANDSCAPE DETAILS

DRAWING NO.
L2

REVISION:
D

ELECTRICAL NOTES:

1. PROVIDE AND INSTALL WARNING TAPE FOR ELECTRIC SERVICE CONDUIT 12" BELOW GRADE. SEE CONDUIT SECTION ON SHEET E4.
2. CONTRACTOR TO PAY FOR THE SERVICE AS DIRECTED BY THE UTILITY COMPANY.
3. CONTRACTOR TO USE SCH. 80 CONDUIT WHERE CONDUITS CROSS ACCESS ROADS.
4. CONTRACTOR SHALL COORDINATE WITH ELECTRIC AND TELEPHONE UTILITY COMPANIES FOR SERVICES.
5. CONTRACTOR TO PAY ALL FEES FOR SERVICES REQUIRED.
6. CONTRACTOR TO BE ADVISED THAT EXISTING UNDERGROUND CONDUITS, GROUND CABLES EXIST. DIG WITH CAUTION.
7. CONTRACTOR TO VERIFY POWER AND TELCO LB LOCATIONS AND FLEX CONDUIT SIZE AND ROUTING TO THE EQUIPMENT CABINET WITH MANUFACTURER'S DRAWINGS.

UTILITY NOTES:

1. ALL POWER CONDUITS ABOVE GRADE, SWEEPS, & ELBOWS TO BE SCH. 40 PVC CONDUIT. ABOVE GROUND CONDUITS SHOULD USE SCH. 80 PVC WHERE EXPOSED AND SUBJECT TO DAMAGE FROM IMPACT.
2. ALL TELCO CONDUITS TO HAVE (3) 3/4" INNERDUCTS. EACH INNERDUCT TO HAVE A PULL STRING.
3. CONTRACTOR OR THEIR SUB-CONTRACTOR SHALL PROVIDE PULL BOXES FOR POWER AND TELCO CONDUIT RUNS AS REQUIRED BY LOCAL, STATE, OR NATIONAL ELECTRICAL CODE, CURRENT VERSION.
4. CONTRACTOR TO INSTALL & CONDUITS TO GENERATOR AS FOLLOWS: (1)-2" POWER CONDUIT TO MAIN BREAKER (MB2), (1)-3/4" POWER CONDUIT FOR BATTERY CHARGER & HEATER CIRCUIT, & (1)-1.25" POWER CONDUIT FOR START CIRCUIT & FOR GENERATOR ALARMS.

REFERENCE NOTES:

35 - GPS MOUNTING DETAIL. SEE DETAIL SHEET E4.
40 - TRENCH DETAIL. SEE DETAIL SHEET E4.
50 - METER CENTER DETAIL. SEE DETAIL SHEET E6A.
51 - POWER & TELCO SINGLE LINE DIAGRAM. SEE DETAIL SHEET E7.
52 - EQUIPMENT RACK DETAILS. SEE DETAIL SHEET E6B.

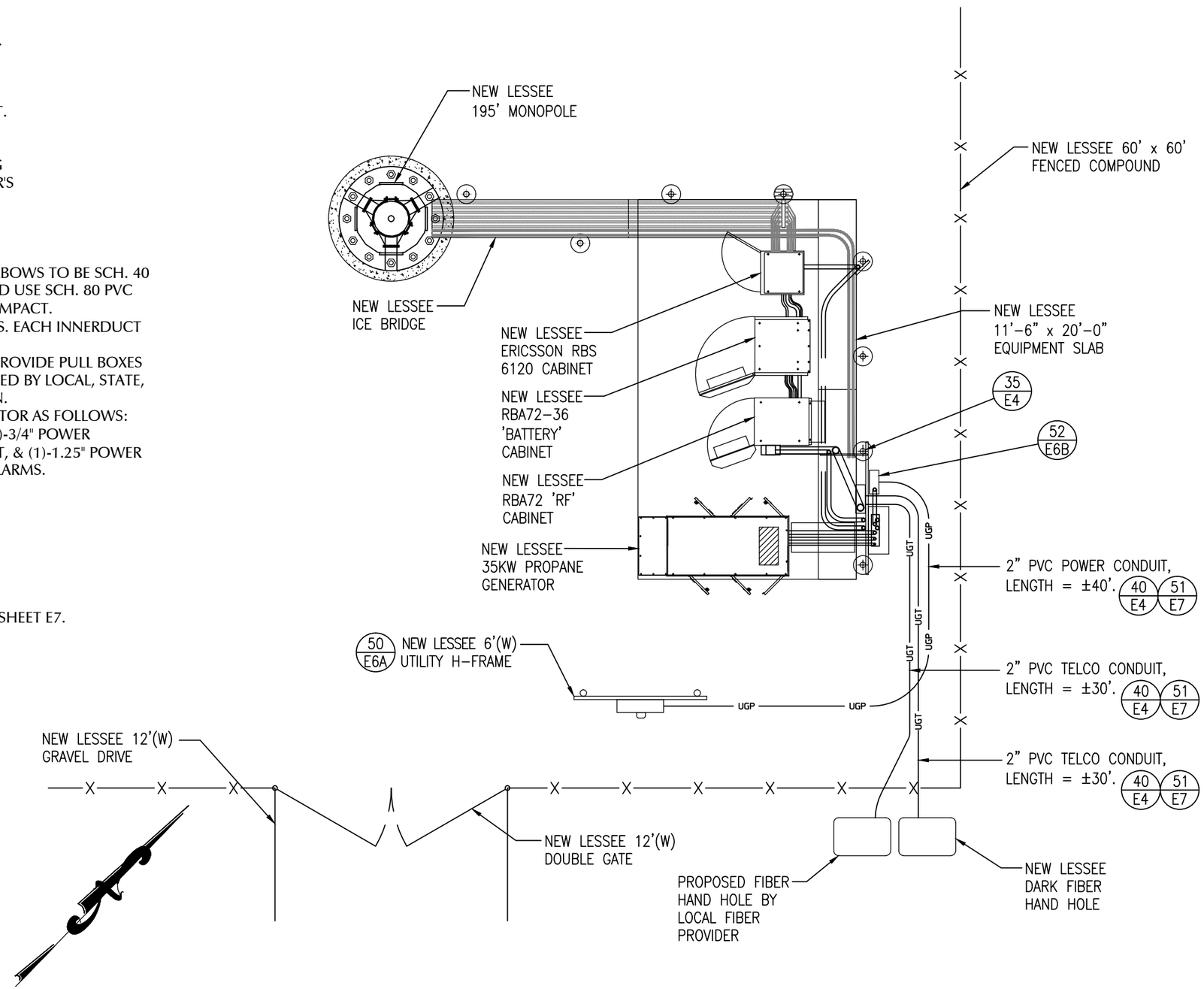

ELECTRICAL LEGEND:

TELEPHONE PEDESTAL	T
OVERHEAD TELEPHONE	OHT
UNDERGROUND TELEPHONE	UGT
OVERHEAD POWER	OHP
UNDERGROUND POWER	UGP

0' 6' 12' 18'

SCALE: 1" = 6'

LESSEE

TeleCAD Wireless
1961 NORTHPOINT BLVD, SUITE 130
HIXSON, TN 37343
PH: 423-843-9500
FAX: 423-843-9509

THE INFORMATION CONTAINED IN THIS SET OF DOCUMENTS IS PROPRIETARY BY NATURE. ANY USE OR DISCLOSURE OTHER THAN THAT WHICH RELATES TO THE CLIENT IS STRICTLY PROHIBITED.

A&E PROJECT #:	20171560879
DRAWN BY:	JSJ
CHECKED BY:	DMB

REVISIONS

NO.	DATE	BY	DESCRIPTION
D	12/5/17	CAD	PRELIMINARY REVIEW
C	11/22/17	CAD	PRELIMINARY REVIEW
B	11/01/17	CAD	PRELIMINARY REVIEW
A	08/29/17	JSJ	PRELIMINARY REVIEW

PROJECT No.
20171560879

SITE NAME:
BELWOOD

SITE NUMBER:
443107

SITE ADDRESS:
156 PETE MAUNEY ROAD
LAWNDALE, NC 28090

DESIGN TYPE:
RAWLAND

SHEET TITLE:
ELECTRICAL SITE PLAN

DRAWING NO.
E1

REVISION:
D

GROUNDING EQUIPMENT

(A) GROUND ROD, TYP. (SEE DETAIL 49/E6 AND NOTES 2 & 3 ON E2B.)

(B) GROUND RING (SEE NOTES 1, 3, & 4 ON E2B)

(C) #2 STC RADIALS FROM TOWER TO FENCE CORNER (SEE NOTE 6 ON E2B)

(D) FENCE POST GROUNDING, TYP. (SEE NOTE 21 ON E2B & DETAIL 42 ON E4)

(E) GATE GROUNDING, TYP. (SEE NOTE 21 ON E2B)

(F) PROPANE TANK GROUNDING (SEE NOTE 19 ON E2B)

(G) REFER TO SHEETS E2B, E4, E5, E6, E8, & E9 FOR GROUNDING NOTES, DETAILS, & SPECIFICATIONS

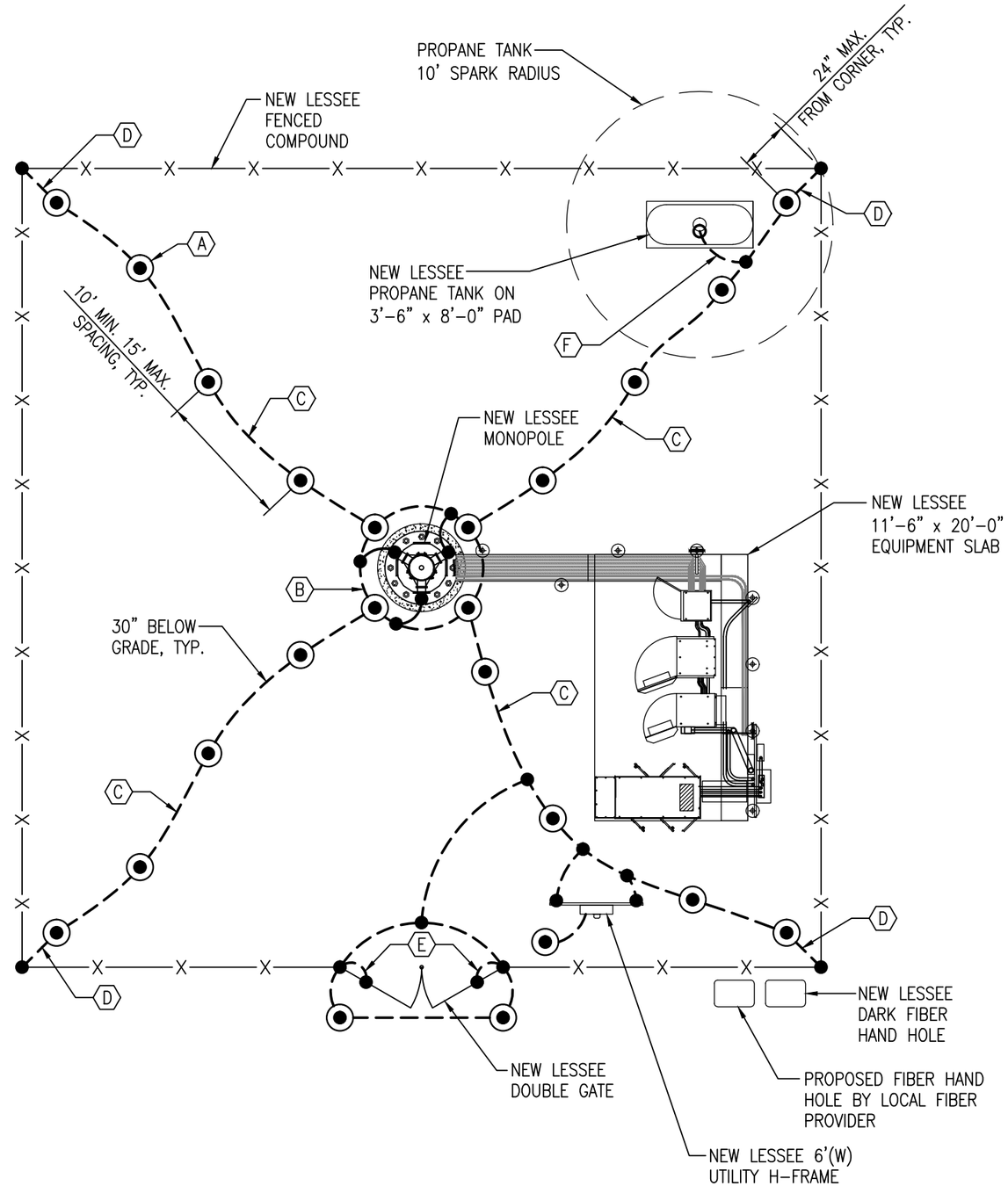

GROUNDING LEGEND:

- GROUND RING - #2 AWG BARE SOLID TINNED COPPER
- 5/8" x 10'-0" COPPER CLAD GROUND ROD
- GROUND ROD EXOTHERMICALLY WELDED TO GROUND RING
- EXOTHERMIC WELD
- GROUND ROD WITH INSPECTION SLEEVE
- MECHANICAL CONNECTION

0' 10' 20' 30'

SCALE: 1" = 10'

LESSEE

TeleCAD Wireless
1961 NORTHPOINT BLVD, SUITE 130
HIXSON, TN 37343
PH: 423-843-9500
FAX: 423-843-9509

THE INFORMATION CONTAINED IN THIS SET OF DOCUMENTS IS PROPRIETARY BY NATURE. ANY USE OR DISCLOSURE OTHER THAN THAT WHICH RELATES TO THE CLIENT IS STRICTLY PROHIBITED.

A&E PROJECT #:	20171560879
DRAWN BY:	JSJ
CHECKED BY:	DMB

REVISIONS

NO.	DATE	BY	DESCRIPTION
D	12/5/17	CAD	PRELIMINARY REVIEW
C	11/22/17	CAD	PRELIMINARY REVIEW
B	11/01/17	CAD	PRELIMINARY REVIEW
A	08/29/17	JSJ	PRELIMINARY REVIEW

PROJECT No.
20171560879

SITE NAME:
BELWOOD

SITE NUMBER:
443107

SITE ADDRESS:
156 PETE MAUNEY ROAD
LAWNDALE, NC 28090

DESIGN TYPE:
RAWLAND

SHEET TITLE:
SITE
GROUNDING PLAN

DRAWING NO.
E2

REVISION:
D

GROUNDING EQUIPMENT

- (A) GROUND ROD TEST WELL (SEE DETAIL 48/E6)
- (B) GROUND ROD, TYP. (SEE DETAIL 49/E6 AND NOTES 2 & 3 ON E2B.)
- (C) GROUND RING (SEE NOTES 1, 3, & 4 ON E2B)
- (D) TDSGA–PA14 OR TDSGA–BC14 WHERE APPLICABLE (SEE NOTES 10B & 11 ON E2B)
- (E) GENERATOR GROUNDING (SEE NOTE 18 ON E2B)
- (F) PAD MOUNTED CABLE TRAY GROUNDING (SEE NOTE 14 ON E2B)
- (G) GPS ANTENNA GROUNDING (SEE NOTE 20 ON E2B)
- (H) RF (RBA72) CABINET GROUNDING (SEE NOTE 15 ON E2B)
- (J) RF (RBS6120) CABINET GROUNDING (SEE NOTE 16 ON E2B)
- (K) (RBA72–36) BATTERY CABINET GROUNDING (SEE NOTE 17 ON E2B)
- (L) ICE BRIDGE POST. BOND TO GROUND RING, TYP. (SEE NOTES 12 & 13 ON E2B)
- (M) FENCE POST GROUNDING, TYP. (SEE NOTE 24 ON E2B & DETAIL 42 ON E4)
- (N) REFER TO SHEETS E2B, E4, E5, E6, E8, & E9 FOR GROUNDING NOTES, DETAILS, & SPECIFICATIONS

GROUNDING LEGEND:

- GROUND RING - #2 AWG BARE SOLID TINNED COPPER
- 5/8" x 10'-0" COPPER CLAD GROUND ROD
- GROUND ROD EXOTHERMICALLY WELDED TO GROUND RING
- EXOTHERMIC WELD
- GROUND ROD WITH INSPECTION SLEEVE
- MECHANICAL CONNECTION

0' 4' 8' 12'

SCALE: 1" = 4'

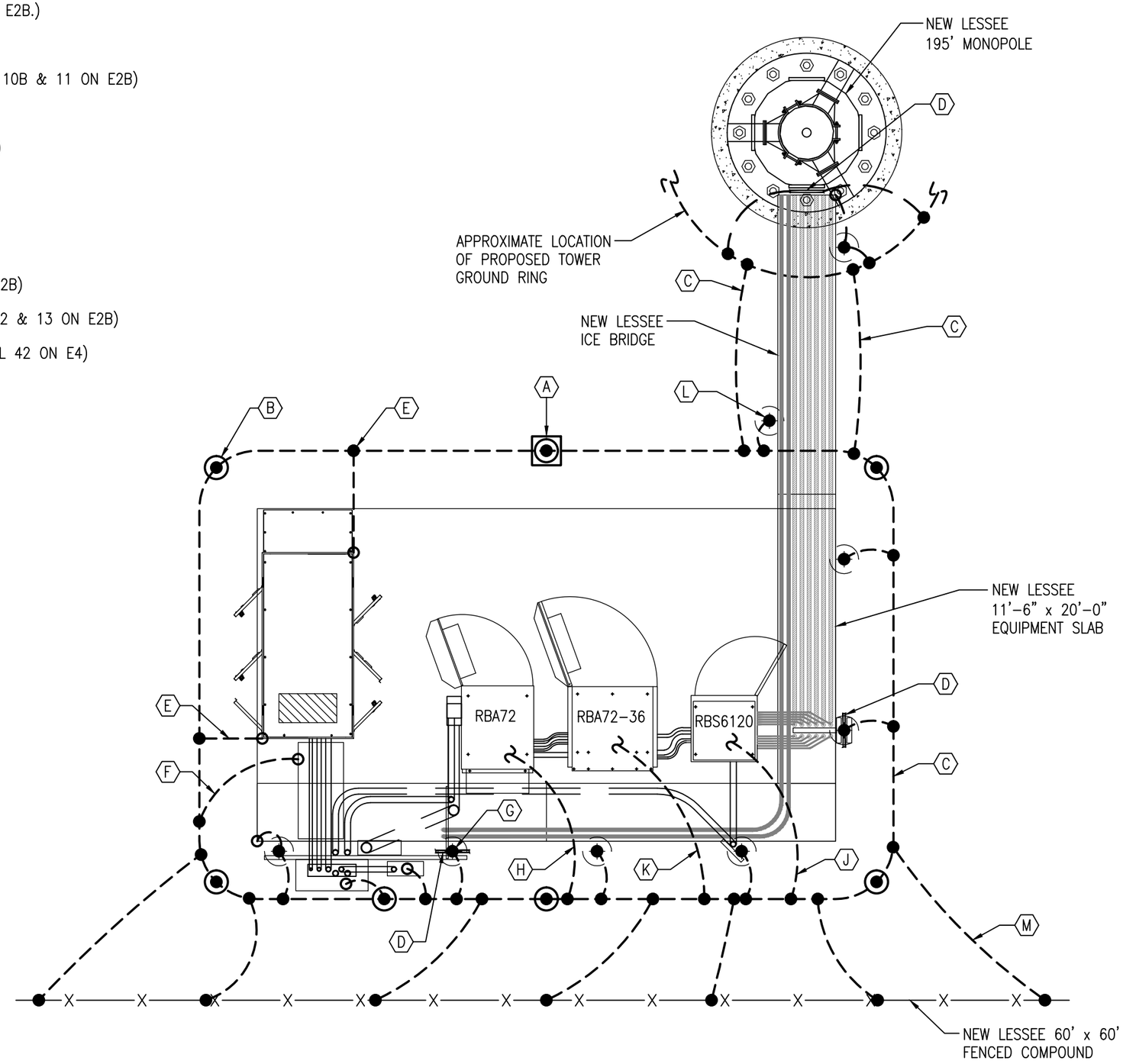

LESSEE

TeleCAD Wireless
1961 NORTHPOINT BLVD, SUITE 130
HIXSON, TN 37343
PH: 423-843-9500
FAX: 423-843-9509

THE INFORMATION CONTAINED IN THIS SET OF DOCUMENTS IS PROPRIETARY BY NATURE. ANY USE OR DISCLOSURE OTHER THAN THAT WHICH RELATES TO THE CLIENT IS STRICTLY PROHIBITED.

A&E PROJECT #:	20171560879
DRAWN BY:	JSJ
CHECKED BY:	DMB

REVISIONS

NO.	DATE	BY	DESCRIPTION
D	12/5/17	CAD	PRELIMINARY REVIEW
C	11/22/17	CAD	PRELIMINARY REVIEW
B	11/01/17	CAD	PRELIMINARY REVIEW
A	08/29/17	JSJ	PRELIMINARY REVIEW

PROJECT No.
20171560879

SITE NAME:
BELWOOD

SITE NUMBER:
443107

SITE ADDRESS:
156 PETE MAUNEY ROAD
LAWNDALE, NC 28090

DESIGN TYPE:
RAWLAND

SHEET TITLE:
EQUIPMENT GROUNDING PLAN

DRAWING NO.
E2A

REVISION:
D

GROUNDING NOTES:

1. THE GROUND RING SHALL CONSIST OF #2 AWG BARE SOLID TINNED COPPER (STC) CONDUCTOR, UNLESS NOTED OTHERWISE, BURIED AT 30" BELOW FINISHED GRADE (OR BELOW FROST LINE). LOCATE 24" MINIMUM AND 36" MAXIMUM FROM EQUIPMENT PAD AND FROM TOWER FOUNDATION. ALL CONNECTIONS SHALL BE MADE USING A PARALLEL TYPE EXOTHERMIC WELD, UNLESS NOTED OTHERWISE.

2. INSTALL GROUND RODS AS SHOWN AND AS REQUIRED. GROUND RODS TO BE COPPER CLAD STEEL, 5/8" DIAMETER AND 10FT IN LENGTH. SPACING BETWEEN GROUND RODS SHALL BE 10FT MINIMUM AND 15FT MAXIMUM. TOP OF GROUND ROD TO BE 30" MINIMUM BELOW GRADE (OR BELOW FROST LINE). BOND TOP OF GROUND ROD TO GROUND WIRE WITH EXOTHERMIC WELD. DO NOT EXOTHERMICALLY WELD ANYTHING TO GROUND ROD EXCEPT GROUND WIRE WHICH PASSES OVER TOP OF GROUND ROD (CLAMPED CONNECTIONS TO GROUND ROD PER TOWER MANUFACTURERS DETAILS ARE ACCEPTABLE).

3. EQUIPMENT GROUND RING SHALL HAVE A MINIMUM OF 4 GROUND RODS, INSTALLED AT THE CORNERS OF THE GROUND RING PLUS ADDITIONAL RODS AS REQUIRED TO COMPLY WITH THE SPACING REQUIREMENTS. TOWER GROUND RING SHALL HAVE A MINIMUM OF 3 GROUND RODS, EXCEPT USE 4 RODS AT A MONOPOLE TOWER. WHERE SPREAD TOWER FOOTING WOULD PREVENT GROUND RODS FROM BEING DRIVEN INTO SOIL ADJACENT TO TOWER, PROVIDE VERTICAL 1" DIAMETER PVC SLEEVES EMBEDDED IN FOOTING TO ALLOW INSTALLATION OF GROUND RODS.

4. EQUIPMENT GROUND RING AND TOWER GROUND RING SHALL BE BONDED TOGETHER WITH TWO #2 STC GROUND LEADS, TYPICALLY ONE ON EACH SIDE OF ICE BRIDGE.

5. BOND TOWER TO TOWER GROUND RING AT THREE LOCATIONS WITH #2 STC GROUND LEAD. SELF SUPPORT TOWERS SHALL HAVE EACH LEG BONDED TO GROUND RING, MONOPOLES AND GUYED TOWERS SHALL HAVE GROUND LEADS EQUALLY SPACED AROUND TOWER. EXOTHERMICALLY WELD GROUND LEADS TO TOP OF BASE PLATES, OR ATTACH TO TOWER USING TOWER MANUFACTURER PROVIDED DETAIL.

6. PROVIDE #2 STC RADIALS FROM THE TOWER GROUND RING TO EACH FENCE CORNER POST. RADIALS SHALL HAVE GROUND RODS AS PER THE REQUIRED SPACING. THE GROUND ROD AT THE END OF EACH RADIAL SHALL BE 24" MAXIMUM FROM FENCE CORNER POST. EQUIPMENT PAD GROUND RING AND CONNECTING GROUND LEADS [BETWEEN EQUIPMENT PAD AND TOWER GROUND RINGS] MAY BE USED AS PART OF THE RADIAL GOING TO THE FENCE CORNER POST CLOSEST TO THE EQUIPMENT PAD.

7. MINIMUM BEND RADIUS FOR #2 AWG GROUND WIRE IS 12", EXCEPT USE 24" FOR TOWER GROUND RINGS AND EQUIPMENT PAD GROUND RINGS.

8. GROUND ALL EXTERIOR EXPOSED METAL OBJECTS. USE TWO HOLE LUGS FOR CONNECTION TO FLAT METAL SURFACES. USE ONLY STAINLESS STEEL HARDWARE ON ALL MECHANICAL CONNECTIONS. CLEAN ALL SURFACES (AND STRIP PAINTED SURFACES) TO BARE BRIGHT METAL PRIOR TO MAKING GROUND CONNECTIONS. APPLY ANTI-OXIDE COMPOUND TO ALL CONNECTIONS. APPLY ZINC RICH PAINT (COLD GALV.) TO ALL EXOTHERMIC WELDS, AND TO ANY METAL EXPOSED BY CLEANING, STRIPPING, GRINDING, CUTTING OR DRILLING.

9. ALL GROUNDING CONDUCTORS ABOVE GRADE SHALL BE RUN IN 3/4" FLEXIBLE PVC CONDUIT. CONDUIT SHALL BEGIN WITHIN 3/4" OF ABOVE GROUND CONNECTION POINT, SHALL EXTEND 24" BELOW GRADE MINIMUM, AND SHALL BE FILLED WITH SEALANT AT ABOVE GROUND CONNECTION POINT. SECURE CONDUIT EVERY 24" ON VERTICAL RUNS AND EVERY 36" ELSEWHERE WITH NON-METALLIC TIES.

10A. AT GUYED AND SELF SUPPORT TOWERS MOUNT TDSGA-PA14 TOWER BOTTOM GROUND BAR ON DEDICATED POST DIRECTLY BELOW COAX CABLES COMING OFF TOWER. POST TO BE 3.5" OD GALVANIZED SCHEDULE 40 PIPE WITH GALVANIZED PIPE CAP. TOP OF POST TO BE 78" ABOVE GRADE. EMBED POST 30" MINIMUM IN 12" DIAMETER BY 36" DEEP MINIMUM CONCRETE FOOTING WITH TOP OF FOOTING 6" BELOW GRADE. IF TOWER FOUNDATION OBSTRUCTS AUGERED FOOTING, USE POST WITH 10" SQUARE GALVANIZED STEEL FLANGE PLATE WELDED TO BOTTOM AND BOLT FLANGE TO TOP OF CONCRETE TOWER FOOTING.

10B. AT MONOPOLE TOWERS CLAMP TDSGA-BC14 TOWER BOTTOM GROUND BAR DIRECTLY TO TOWER. IF RUNNING COAX INSIDE MONOPOLE, CLAMP ONTO BOTTOM LIP OF EXIT PORT. IF BANDING COAX TO OUTSIDE OF TOWER, CLAMP ONTO STEEL ANGLE WHICH IS BANDED TO TOWER. BOND TDSGA-BC14 TO TOWER GROUND RING WITH TWO #2 STC LEADS LUGGED TO GROUND BAR AND EXOTHERMICALLY WELDED TO GROUND RING.

11. AT EQUIPMENT PAD, INSTALL TDSGA-PA14 EXTERIOR GROUND BAR (THRU-BOLTED STYLE) AT BASE OF ICE BRIDGE POST SUPPORTING COAX CABLE LADDER AND AT BASE OF ICE BRIDGE POST SUPPORTING HYBRID CABLE LADDER. MOUNT GROUND BAR TO POST AT 18" ABOVE TOP OF CONCRETE PAD, EXCEPT MOUNT GROUND BAR 6" ABOVE TOP OF PAD WHEN USED AS A GROUNDING POINT BY RACK MOUNTED RRU'S OR BY COAX/HYBRID CABLES COMING FROM UNDERGOUND CONDUITS.

12. ALL ICE BRIDGE SECTIONS ARE TO BE JUMPERED TOGETHER WITH #2 WIRE, EITHER BARE TINNED COPPER OR GREEN INSULATED STRANDED. ICE BRIDGE SHALL BE GROUNDED AT EACH END WITH #2 STC WIRE LUGGED TO ICE BRIDGE AND EXOTHERMICALLY WELDED TO UPPER PORTION OF NEAREST ICE BRIDGE POST.

13. BOND EACH ICE BRIDGE POST, H-FRAME POST OR DEDICATED GROUNDING POST TO BURIED GROUNDING SYSTEM WITH #2 STC LEAD EXOTHERMICALLY WELDED TO POST BELOW TOP OF GRAVEL AND EXOTHERMICALLY WELDED TO GROUND RING. EACH POST TO HAVE SEPARATE GROUND LEAD DIRECTLY TO GROUND RING - DO NOT DAISY CHAIN POSTS TOGETHER.

14. BOND SURFACE MOUNTED CABLE TRAY TO GROUND RING WITH #2 STC LEAD LUGGED TO SIDE OF GRIP STRUT CABLE TRAY COVER AND EXOTHERMICALLY WELDED TO GROUND RING.

15. BOND EACH COMMSCOPE RBA72 CABINET TO EQUIPMENT PLATFORM GROUND RING WITH #2 AWG TINNED SOLID BARE COPPER CONDUCTOR LUGGED TO CABINET BODY AND EXOTHERMICALLY WELDED TO GROUND RING. LUG TO CABINET BODY USING LOCATION AT WHICH STUDS ON CABINET CHASSIS HAVE DIRECT GROUND WIRE CONNECTION TO CABINET INTERNAL GROUND BAR. RUN CONDUIT AND CONDUCTOR ACROSS BACK OF CABINET (DO NOT RUN TOWARDS NEAREST CORNER OF CABINET AND THEN BEND GROUND WIRE SHARPLY), ACROSS CONCRETE PAD BELOW CABLE LADDER, THEN DOWN INTO GRAVEL AREA.

16. BOND EACH ERICSSON RBS6120 CABINET TO GROUND RING WITH #2 AWG TINNED SOLID BARE COPPER CONDUCTOR LUGGED TO CABINET GROUND BAR AND EXOTHERMICALLY WELDED TO GROUND RING. RUN GROUND LEAD IN FLEX CONDUIT ACROSS CONCRETE PAD BELOW CABLE LADDER, THEN DOWN INTO GRAVEL AREA. CONNECT FLEX CONDUIT TO CABINET AT PLINTH COVER PLATE WITH POSITIVE MECHANICAL FLEXIBLE CONDUIT FITTING.

17. BOND EACH COMMSCOPE RBA72-36 BATTERY CABINET TO GROUND RING WITH #2 AWG TINNED SOLID BARE COPPER CONDUCTOR LUGGED TO CABINET BODY AND EXOTHERMICALLY WELDED TO GROUND RING. RUN GROUND LEAD IN FLEX CONDUIT ALONG BACK OF RBA72 CABINET, ACROSS CONCRETE PAD BELOW CABLE LADDER, THEN DOWN INTO GRAVEL AREA. CONNECT TWO HOLE LUG TO BACK OF CABINET AT FACTORY PROVIDED GROUNDING STUDS.

18. BOND GENERATOR TO GROUND RING WITH #2 STC AT TWO DIAGONALLY OPPOSITE LOCATIONS BY DRILLING AND BOLTING TWO HOLE LUG TO FINS ON GENERATOR BASE STRUCTURE. GROUND LEADS SHOULD RUN ALONG BASE OF GENERATOR AND TAKE SHORTEST PATH ACROSS CONCRETE PAD TO GRAVEL AREA, THEN CONTINUE TO GROUND RING.

19. WHERE PROPANE TANK IS INSTALLED TO FUEL GENERATOR, BOND PROPANE TANK TO GROUND RING WITH A SINGLE #2 STC CLAMPED TO FILLER PIPE OF PROPANE TANK AND EXOTHERMICALLY WELDED TO GROUND RING. GROUND LEAD SHOULD RUN TO TANK SUPPORT AND TAKE SHORTEST PATH ACROSS CONCRETE PAD TO GRAVEL AREA, THEN CONTINUE TO GROUND RING. IF PROPANE TANK FUEL LINE IS METALLIC, BOND FUEL LINE TO EQUIPMENT GROUND RING WHERE THE TWO LINES CROSS WITH A SINGLE #2 STC CLAMPED TO FUEL LINE AND EXOTHERMICALLY WELDED TO GROUND RING.

20. BOND GPS ANTENNA AND GPS ANTENNA MOUNT TO TSDGA GROUND BAR AT BOTTOM OF ICE BRIDGE POST WITH #2 GREEN INSULATED STRANDED GROUND WIRE.

21. PROVIDE TWO GROUND RODS OUTSIDE GATES OF COMPOUND. DISTANCE BETWEEN GROUND RODS SHALL MATCH WIDTH OF GATE OPENING, AND DISTANCE FROM FENCE SHALL MATCH LENGTH OF LONGEST INDIVIDUAL GATE LEAF. BOND GATE POSTS TOGETHER WITH #2 STC LEAD WHICH RUNS PAST AND CONNECTS TO GROUND RODS OUTSIDE GATES.

22. BOND EACH GATE POST WITH #2 STC TO NEAREST PORTION OF GROUNDING SYSTEM INSIDE COMPOUND.

23. BOND EACH GATE TO GATE POST WITH FLEXIBLE INSULATED OR BRAIDED #4/0 COPPER STRAP. EXOTHERMICALLY WELD STRAP TO BOTH GATE AND GATE POST.

24. ANY METAL FENCE POST WITHIN 6FT OF A GROUNDED METAL OBJECT SHALL BE BONDED TO THE NEAREST GROUND RING. ANY METAL FENCE WITHIN 6FT OF A GROUND RING SHALL HAVE THE LINE POSTS BONDED TO THE GROUND RING AT 20FT MAXIMUM INTERVALS AS MEASURED ALONG THE LENGTH OF THE FENCE.

25. WHERE GROUND BASED RRU'S ARE INSTALLED ON H-FRAMES AT THE EQUIPMENT PAD, BOND EACH RRU TO TDSGA GROUND BAR AT BASE OF H-FRAME POST WITH #2 GREEN INSULATED STRANDED GROUND WIRE. SINGLE HOLE LUG OR RING TYPE CONNECTOR IS SUITABLE FOR CONNECTION TO GROUNDING STUD ON RRU.

26. NOTIFY VZW CM TO INSPECT GROUND RING BEFORE BACKFILLING. CONTRACTOR SHALL HIRE A 3RD PARTY TO PERFORM AN IEEE81 FALL OF POTENTIAL METHOD GROUND TEST. MAXIMUM ALLOWABLE RESISTANCE TO GROUND IS 5 OHMS. PROVIDE ADDITIONAL GROUND SYSTEM COMPONENTS AS REQUIRED TO ACHIEVE THIS VALUE.

27. REFER TO TOWER GROUNDING DIAGRAM AND NOTES FOR GROUND SYSTEM REQUIREMENTS ON THE TOWER.

28. GROUNDING OF ALL ELECTRICAL EQUIPMENT SHALL BE AS PER NEC, MUNICIPAL AND UTILITY COMPANY REQUIREMENTS.

LESSEE

TeleCAD Wireless
1961 NORTHPOINT BLVD, SUITE 130
HIXSON, TN 37343
PH: 423-843-9500
FAX: 423-843-9509

THE INFORMATION CONTAINED IN THIS SET OF DOCUMENTS IS PROPRIETARY BY NATURE. ANY USE OR DISCLOSURE OTHER THAN THAT WHICH RELATES TO THE CLIENT IS STRICTLY PROHIBITED.

A&E PROJECT #:	20171560879
DRAWN BY:	JSJ
CHECKED BY:	DMB

REVISIONS

NO.	DATE	BY	DESCRIPTION
D	12/5/17	CAD	PRELIMINARY REVIEW
C	11/22/17	CAD	PRELIMINARY REVIEW
B	11/01/17	CAD	PRELIMINARY REVIEW
A	08/29/17	JSJ	PRELIMINARY REVIEW

PROJECT No.
20171560879

SITE NAME:
BELWOOD

SITE NUMBER:
443107

SITE ADDRESS:
156 PETE MAUNEY ROAD
LAWNDALE, NC 28090

DESIGN TYPE:
RAWLAND

SHEET TITLE:
GROUNDING NOTES

DRAWING NO.
E2B

REVISION:
D

ELECTRICAL SPECIFICATIONS:

1. SCOPE: PROVIDE LABOR, MATERIALS, AND EQUIPMENT, ETC., REQUIRED TO COMPLETE THE INSTALLATION SHOWN ON THE DRAWINGS.

2. CODES AND STANDARDS: INSTALLATION SHALL COMPLY WITH APPLICABLE LAWS AND ORDINANCES, UTILITY COMPANY REGULATIONS, AND APPLICABLE REQUIREMENTS OF THE LATEST EDITIONS OF:

   A. NFC - NATIONAL FIRE CODES
   B. UL - UNDERWRITERS LABORATORIES
   C. NEC - NATIONAL ELECTRIC CODE
   D. NEMA - NATIONAL ELECTRICAL MANUFACTURES ASSOCIATION
   E. OSHA - OCCUPATIONAL SAFETY AND HEALTH ACT
   F. SBC - STANDARD BUILDING CODE

3. PERMITS: OBTAIN AND PAY FOR REQUIRED PERMITS, LICENSES, FEES, INSPECTIONS, ETC.

4. COORDINATION: COORDINATE WORK WITH OTHER TRADES.

5. SUBMITTALS: SUBMIT BROCHURES FOR APPROVAL ON MAJOR SYSTEM COMPONENTS.

6. EXISTING SERVICES: DO NOT INTERRUPT EXISTING SERVICES WITHOUT WRITTEN PERMISSION OF THE OWNER.

7. EQUIPMENT: CONNECT ELECTRICALLY OPERATED EQUIPMENT.

8. RECORD DRAWINGS: MAINTAIN A RECORD OF ALL CHANGES AND SUBSTITUTIONS BETWEEN WORK AS SPECIFIED AND INSTALLED. RECORD CHANGES ON A CLEAN SET OF CONTRACT DOCUMENTS WHICH SHALL BE TURNED OVER TO THE OWNER UPON COMPLETION OF THE PROJECT.

9. IDENTIFICATION: IDENTIFY SERVICE DISCONNECTING MEANS WITH PERMANENT NAME PLATE.

10. GUARANTEE/WARRANTY: GUARANTEE INSTALLATION TO BE FREE OF DEFECTS, SHORTS, GROUNDS, ETC., FOR A PERIOD OF ONE YEAR. FURNISH WARRANTY SO THE DEFECTIVE MATERIALS AND/OR WORKMANSHIP WILL BE REPAIRED/REPLACED IMMEDIATELY UPON NOTIFICATION AT NO COST TO THE OWNER FOR THE PERIOD OF THE WARRANTY.

11. CUTTING AND PATCHING: PROVIDE CUTTING REQUIRED TO DO THE WORK. DO NOT CUT MAJOR STRUCTURAL ELEMENTS WITHOUT APPROVAL. PATCHING SHALL BE OF QUALITY EQUAL TO AND OF MATCHING APPEARANCE OF EXISTING CONSTRUCTION.

12. DITCHING AND BACKFILL: PROVIDE FOR ALL UNDERGROUND INSTALLED CONDUIT AND/OR CABLES.

13. RACEWAYS: UNDERGROUND CONDUIT SHALL BE SCHEDULE 80 PVC CONDUIT (MEET NEMA TC2 - 1990). EXPOSED CONDUIT SHALL BE RIGID GALVANIZED STEEL CONDUIT. UNDERGROUND PVC CONDUIT SHALL TRANSITION TO RIGID GALVANIZED STEEL CONDUIT BEFORE RISING ABOVE GRADE. PLUG AND CAP EACH END OF SPARE AND EMPTY CONDUITS AND PROVIDE TWO SEPARATE PULL STRINGS - 200 LB. TEST POLYETHYLENE CORD. ALL CONDUIT BENDS SHALL BE A MINIMUM OF 24" RADIUS. RGS CONDUITS WHEN SPECIFIED, SHALL MEET UL-6 FOR GALVANIZED STEEL. ALL FITTINGS SHALL BE SUITABLE FOR USE WITH THREADED RIGID CONDUIT.

14. SUPPORTS: AS REQUIRED BY THE NEC.

15. CONDUCTORS: USE 98% CONDUCTIVITY COPPER WITH TYPE THHN OR EQUIVALENT 90°C INSULATION, 600 VOLT, COLOR CODED. USE SOLID CONDUCTORS FOR WIRE UP TO AND INCLUDING NO. 10 AWG. USE STRANDED CONDUCTORS FOR WIRE ABOVE NO. 10 AWG.

16. CONNECTORS FOR POWER CONDUCTORS: USE COMPRESSION TYPE INSULATED CONNECTORS FOR #10 AWG AND SMALLER. USE SOLDERLESS MECHANICAL TERMINAL LUGS FOR #8 AWG AND LARGER.

17. GROUNDING: MAIN GROUNDING CONDUCTORS SHALL BE A MINIMUM OF #2 AWG SOLID TINNED COPPER. GROUNDING LEADS ON ANTENNA SUPPORT STRUCTURES SHALL BE A MINIMUM OF #2 AWG SOLID BARE COPPER AND SHALL BE TINNED WHERE THEY ARE INSTALLED AGAINST THE STRUCTURE. GROUND BARS SHALL BE 1/4" THICK, 4" WIDE, LENGTH AS REQUIRED. GROUND RESISTANCE TO BE 5 OHM MAXIMUM. PROVIDE ADDITIONAL GROUNDING PLATES AS REQUIRED.

18. TELEPHONE SERVICE: PROVIDE EMPTY CONDUITS WITH PULL WIRES (10' ON EACH SIDE OF CONDUIT).

19. SERVICE: 240/120, SINGLE PHASE, 3 WIRE, 200 AMP FROM THE METER.

LESSEE

TeleCAD Wireless
1961 NORTHPOINT BLVD, SUITE 130
HIXSON, TN 37343
PH: 423-843-9500
FAX: 423-843-9509

THE INFORMATION CONTAINED IN THIS SET OF DOCUMENTS IS PROPRIETARY BY NATURE. ANY USE OR DISCLOSURE OTHER THAN THAT WHICH RELATES TO THE CLIENT IS STRICTLY PROHIBITED.

A&E PROJECT #:	20171560879
DRAWN BY:	JSJ
CHECKED BY:	DMB

REVISIONS

NO.	DATE	BY	DESCRIPTION
D	12/5/17	CAD	PRELIMINARY REVIEW
C	11/22/17	CAD	PRELIMINARY REVIEW
B	11/01/17	CAD	PRELIMINARY REVIEW
A	08/29/17	JSJ	PRELIMINARY REVIEW

PROJECT No.
20171560879

SITE NAME:
BELWOOD

SITE NUMBER:
443107

SITE ADDRESS:
156 PETE MAUNEY ROAD
LAWNDALE, NC 28090

DESIGN TYPE:
RAWLAND

SHEET TITLE:
ELECTRICAL SPECIFICATIONS

DRAWING NO.
E3

REVISION:
D

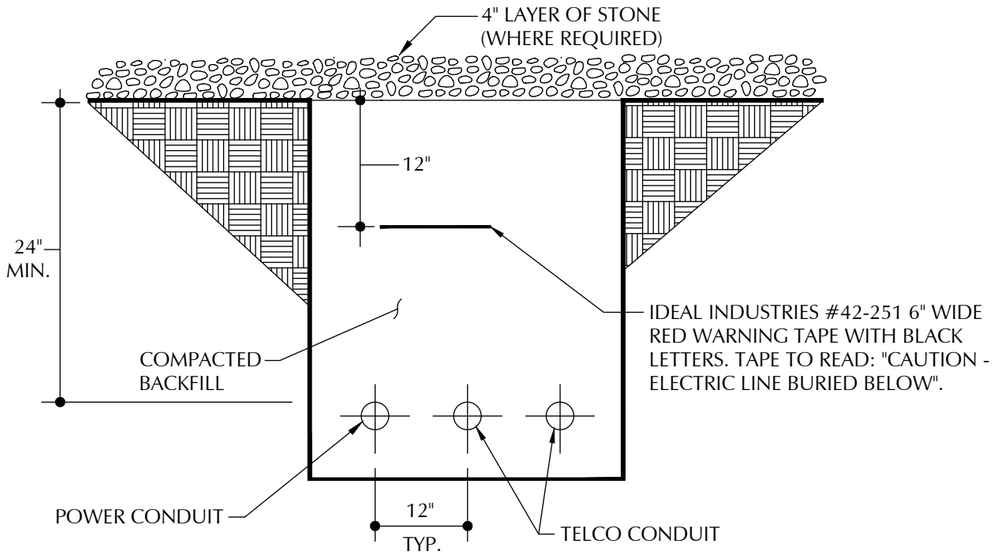

NOTE: TYPICAL SPACING FOR
ALL UNDERGROUND CONDUITS.

TRENCH DETAIL

NTS

40
E1

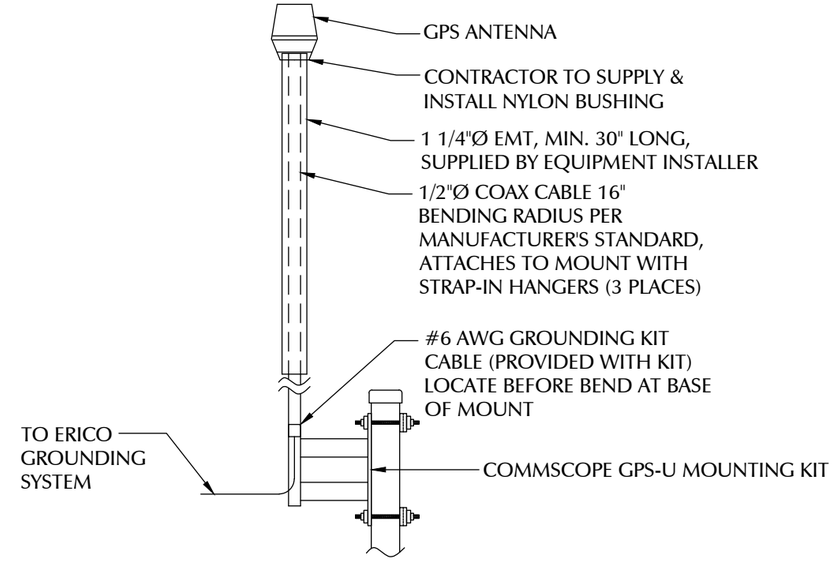

1. EQUIPMENT INSTALLER IS RESPONSIBLE FOR INSTALLATION OF ANTENNA, MOUNTS, & COAX.
2. CONTRACTOR IS RESPONSIBLE FOR GPS MOUNTING PIPE, GROUND AND CLAMP AROUND THE MAST FOR THE GPS.
3. GPS ANTENNA TO BE MOUNTED TO EXTENDED ICE BRIDGE POST, OR TO STANDARD HEIGHT POST USING EXTENDED MOUNTING PIPE, USING COMMSCOPE GPS-U MOUNTING KIT. MOUNT AS NEAR AS IS PRACTICAL TO RBA72 CABINET.

GPS MOUNTING DETAIL

NTS

35
E1

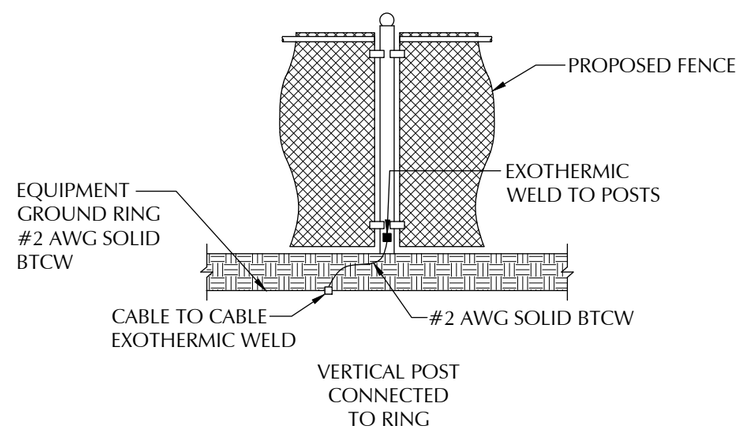

FENCE GROUNDING

NTS

42
E2

LESSEE

TeleCAD Wireless
1961 NORTHPOINT BLVD, SUITE 130
HIXSON, TN 37343
PH: 423-843-9500
FAX: 423-843-9509

THE INFORMATION CONTAINED IN THIS SET OF DOCUMENTS IS PROPRIETARY BY NATURE. ANY USE OR DISCLOSURE OTHER THAN THAT WHICH RELATES TO THE CLIENT IS STRICTLY PROHIBITED.

A&E PROJECT #:	20171560879
DRAWN BY:	JSJ
CHECKED BY:	DMB

REVISIONS

NO.	DATE	BY	DESCRIPTION
D	12/5/17	CAD	PRELIMINARY REVIEW
C	11/22/17	CAD	PRELIMINARY REVIEW
B	11/01/17	CAD	PRELIMINARY REVIEW
A	08/29/17	JSJ	PRELIMINARY REVIEW

PROJECT No.
20171560879

SITE NAME:
BELWOOD

SITE NUMBER:
443107

SITE ADDRESS:
156 PETE MAUNEY ROAD
LAWNDALE, NC 28090

DESIGN TYPE:
RAWLAND

SHEET TITLE:
ELECTRICAL DETAILS

DRAWING NO.
E4

REVISION:
D

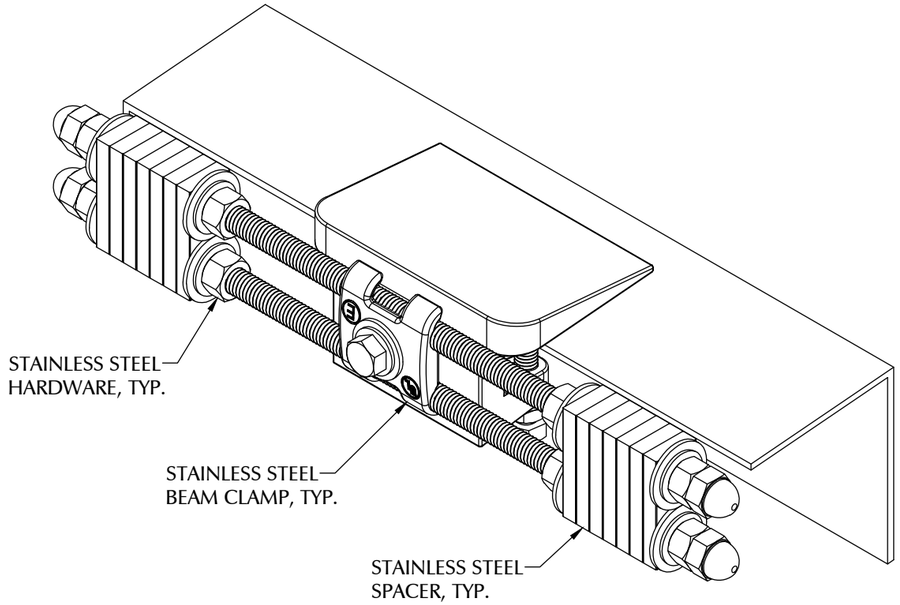

ERICO GROUND BEAM CLAMP (TDSGA-BC14)

36 / --

NTS

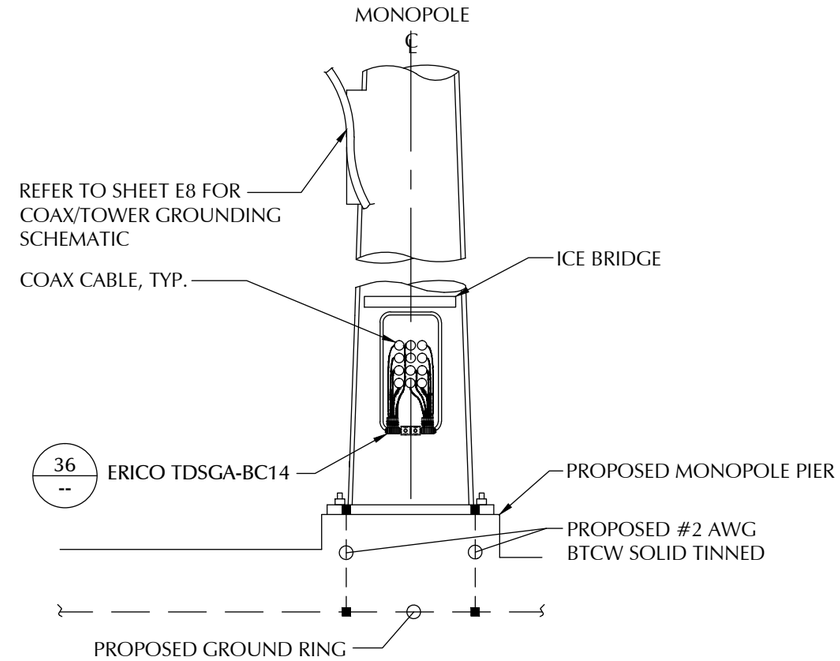

NOTE:

1. MOUNT ERICO TDSGA-BC14 TO COAX PORT LIP OF TOWER

ANTENNA CABLE GROUNDING FOR MONOPOLE

46 / --

NTS

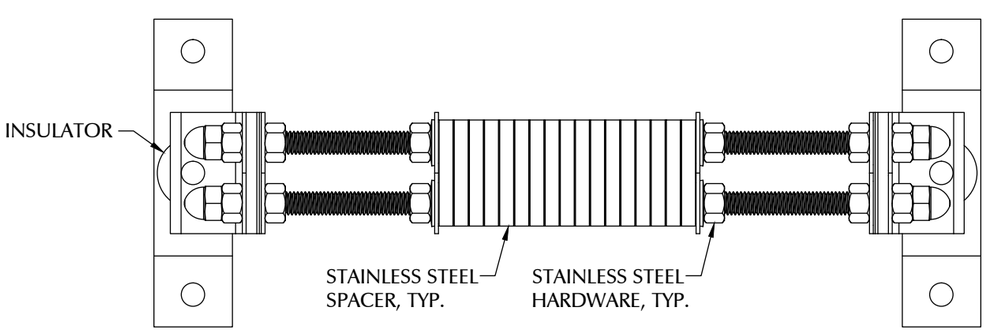

ERICO INSULATED (TDSGA-WB17)

37 / --

NTS

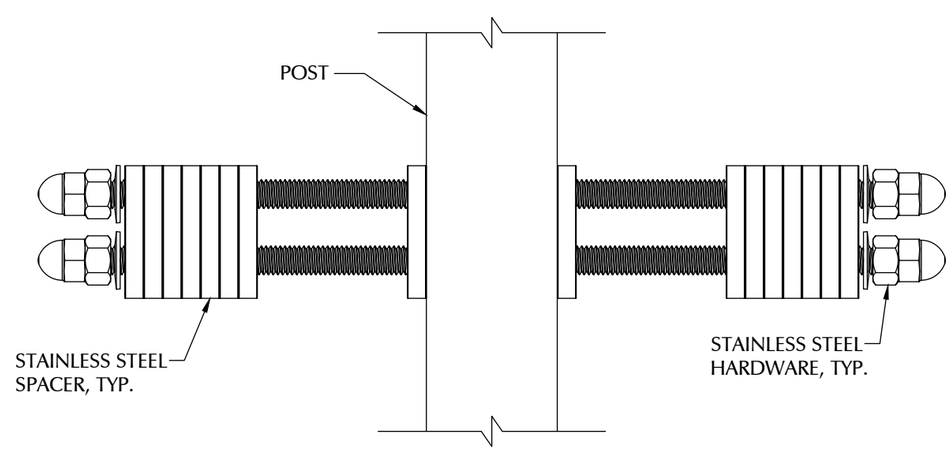

ERICO POST MOUNTED (TDSGA-PA14)

38 / --

NTS

LESSEE

TeleCAD Wireless
1961 NORTHPOINT BLVD, SUITE 130
HIXSON, TN 37343
PH: 423-843-9500
FAX: 423-843-9509

THE INFORMATION CONTAINED IN THIS SET OF DOCUMENTS IS PROPRIETARY BY NATURE. ANY USE OR DISCLOSURE OTHER THAN THAT WHICH RELATES TO THE CLIENT IS STRICTLY PROHIBITED.

A&E PROJECT #:	20171560879
DRAWN BY:	JSJ
CHECKED BY:	DMB

REVISIONS

NO.	DATE	BY	DESCRIPTION
D	12/5/17	CAD	PRELIMINARY REVIEW
C	11/22/17	CAD	PRELIMINARY REVIEW
B	11/01/17	CAD	PRELIMINARY REVIEW
A	08/29/17	JSJ	PRELIMINARY REVIEW

PROJECT No.
20171560879

SITE NAME:
BELWOOD

SITE NUMBER:
443107

SITE ADDRESS:
156 PETE MAUNEY ROAD
LAWNDALE, NC 28090

DESIGN TYPE:
RAWLAND

SHEET TITLE:
ELECTRICAL DETAILS

DRAWING NO.: E5

REVISION: D

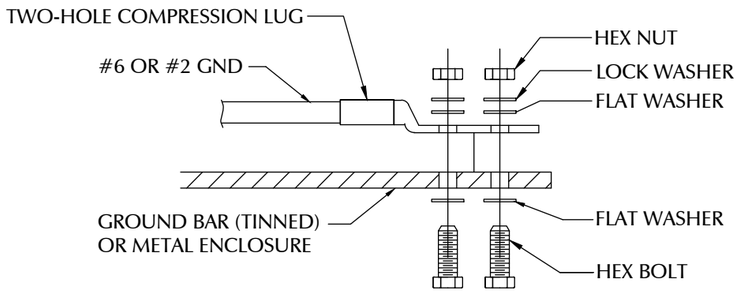

INSTALLATION NOTES:
1. BOLTS, WASHERS, AND NUTS SHALL BE STAINLESS STEEL.
2. SELECT BOLT LENGTH TO PROVIDE A MINIMUM OF TWO EXPOSED THREADS.
3. BURNISH MOUNTING SURFACE TO REMOVE PAINT IN THE AREA OF LUG CONTACT.
4. APPLY ANTI-OXIDANT COMPOUND TO MATING SURFACE OF LUG & WIPE CLEAN EXCESS COMPOUND.
5. USE 1/4" HARDWARE FOR ATTACHMENT TO METAL ENCLOSURES & 3/8" FOR ATTACHMENT TO GROUND BARS.
6. ALL BOLTS MUST HAVE AT LEAST 2 THREAD ENGAGEMENT.

GROUNDING CONNECTION TO GROUND BAR OR FLAT SURFACE

45 / --

NTS

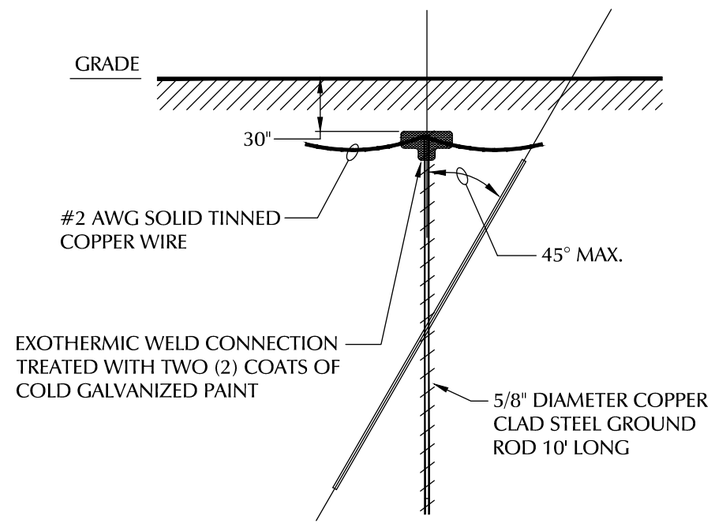

GROUND ROD DETAIL

49 / E2

NTS

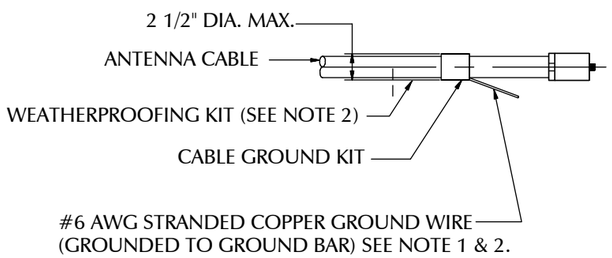

GROUND KIT NOTES:
1. DO NOT INSTALL CABLE GROUND KIT AT A BEND AND ALWAYS DIRECT GROUND WIRE DOWN TO GROUND BAR.
2. GROUNDING KIT AND WEATHER PROOFING KIT SHALL BE OF THE SAME TYPE AND PART NUMBER AS SUPPLIED OR RECOMMENDED BY CABLE MANUFACTURER.

CONNECTION OF CABLE GROUND KIT TO ANTENNA CABLE

47 / --

NTS

REMOVABLE COVER TO BE PAINTED RED AT TOWER RING CONNECTIONS.

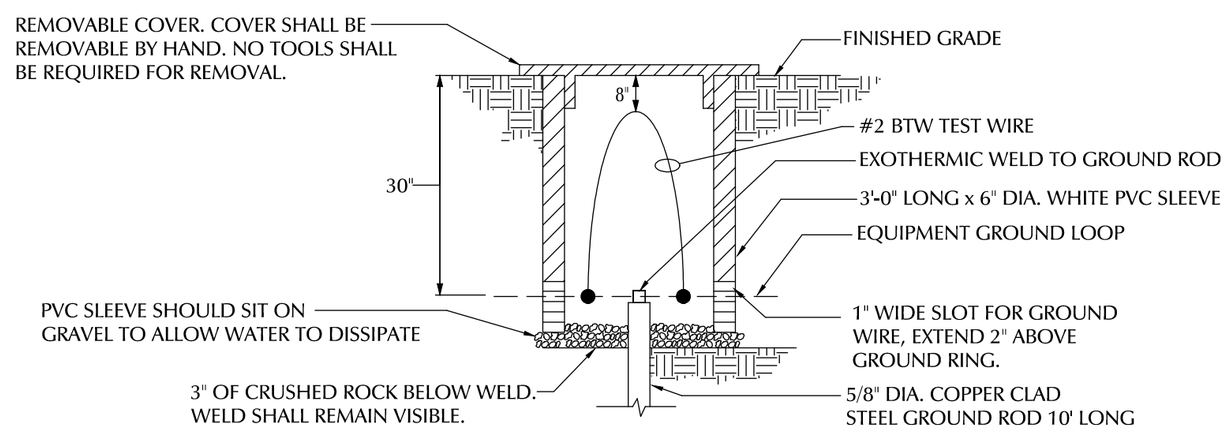

GROUND ROD TEST WELL DETAIL

48 / --

NTS

LESSEE

TeleCAD Wireless
1961 NORTHPOINT BLVD, SUITE 130
HIXSON, TN 37343
PH: 423-843-9500
FAX: 423-843-9509

THE INFORMATION CONTAINED IN THIS SET OF DOCUMENTS IS PROPRIETARY BY NATURE. ANY USE OR DISCLOSURE OTHER THAN THAT WHICH RELATES TO THE CLIENT IS STRICTLY PROHIBITED.

A&E PROJECT #:	20171560879
DRAWN BY:	JSJ
CHECKED BY:	DMB

REVISIONS

NO.	DATE	BY	DESCRIPTION
D	12/5/17	CAD	PRELIMINARY REVIEW
C	11/22/17	CAD	PRELIMINARY REVIEW
B	11/01/17	CAD	PRELIMINARY REVIEW
A	08/29/17	JSJ	PRELIMINARY REVIEW

PROJECT No.: 20171560879

SITE NAME: BELWOOD

SITE NUMBER: 443107

SITE ADDRESS: 156 PETE MAUNEY ROAD LAWNDALE, NC 28090

DESIGN TYPE: RAWLAND

SHEET TITLE: ELECTRICAL DETAILS

DRAWING NO.: E6

REVISION: D

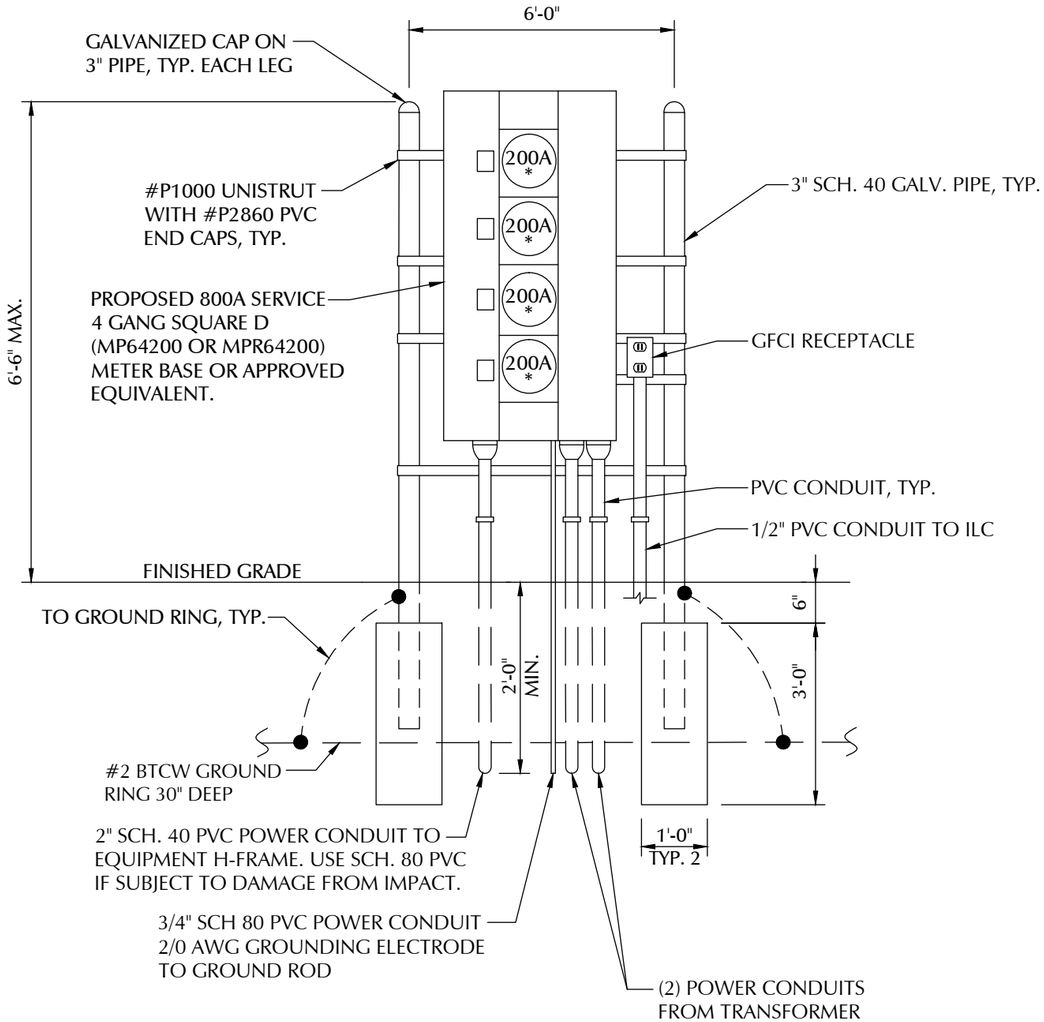

UTILITY NOTE:

1. ALL POWER CONDUITS ABOVE GRADE TO BE SCH. 40 OR SCH. 80 PVC IF SUBJECT TO DAMAGE FROM IMPACT, NOT RGS.
2. GC TO INSTALL PHENOLIC NAMES PLATES ON ALL VERIZON ITEMS (HOFFMAN BOX, METER, BREAKER, ETC.)
3. GC TO COORDINATE WITH LOCAL UTILITY FOR SPECIFICATIONS AND INSTALLATION OF CONDUIT FROM METER CENTER TO TRANSFORMER.

METER CENTER DETAIL

NTS

50
E1

CONTRACTOR TO GROUND ALL DEVICES TO EXTERIOR GROUND RING. CONTRACTOR TO REMOVE PAINT FOR CONTACT TO METAL SURFACES WHERE THEY MAKE CONTACT WITH TWO HOLE LUG. INSTALL AN ANTI-OXIDANT COMPOUND BETWEEN LUG AND METAL SURFACE (NOALOX, COPPER SHIELD OR EQUIVALENT). INSTALL #2 AWG BTCW IN 3/4" PVC AND SEAL TOP OF CONDUIT WITH CLEAR SILICONE. SECURE PVC PIPE TO RACK WITH 2-PIECE UNISTRUT PIPE CLAMP.

LESSEE

TeleCAD Wireless
1961 NORTHPOINT BLVD, SUITE 130
HIXSON, TN 37343
PH: 423-843-9500
FAX: 423-843-9509

THE INFORMATION CONTAINED IN THIS SET OF DOCUMENTS IS PROPRIETARY BY NATURE. ANY USE OR DISCLOSURE OTHER THAN THAT WHICH RELATES TO THE CLIENT IS STRICTLY PROHIBITED.

A&E PROJECT #:	20171560879
DRAWN BY:	JSJ
CHECKED BY:	DMB

REVISIONS

NO.	DATE	BY	DESCRIPTION
D	12/5/17	CAD	PRELIMINARY REVIEW
C	11/22/17	CAD	PRELIMINARY REVIEW
B	11/01/17	CAD	PRELIMINARY REVIEW
A	08/29/17	JSJ	PRELIMINARY REVIEW

PROJECT No.
20171560879

SITE NAME:
BELWOOD

SITE NUMBER:
443107

SITE ADDRESS:
156 PETE MAUNEY ROAD
LAWNDALE, NC 28090

DESIGN TYPE:
RAWLAND

SHEET TITLE:
ELECTRICAL DETAILS

DRAWING NO.
E6A

REVISION:
D

KEY NOTES – ELECTRICAL EQUIPMENT

1. H–FRAME POST WITH AREA LIGHT, LITHONIA HFR SERIES, 250W METAL HALIDE, SCWA BALLAST, NATURAL ALUMINUM FINISH (OR APPROVED EQUIVALENT)
2. NEMA 3R ENCLOSURE PVC TELCO BOX WITH REMOVABLE FRONT PANEL (18" x 18" x 6" NOMINAL)
3. 20 AMP GFCI DUPLEX RECEPTACLE IN LOCKABLE WEATHERPROOF ENCLOSURE.
4. 200 AMP, 120/240 VOLT, ILC WITH 42 SPACE PANEL AND AUTOMATIC TRANSFER SWITCH (30" x 60" x 10" NOMINAL). ILC FURNISHED BY VZW AND INSTALLED BY GC.
5. 200 AMP, 120/240 VOLT, SAFETY DISCONNECT SWITCH IN NEMA 3R ENCLOSURE (15" X 30" x 9" NOMINAL)
6. TIMER SWITCH, ENERLITES HET06 SERIES (OR APPROVED EQUIVALENT) IN WEATHERPROOF ENCLOSURE WITH CLEAR PLASTIC COVER.

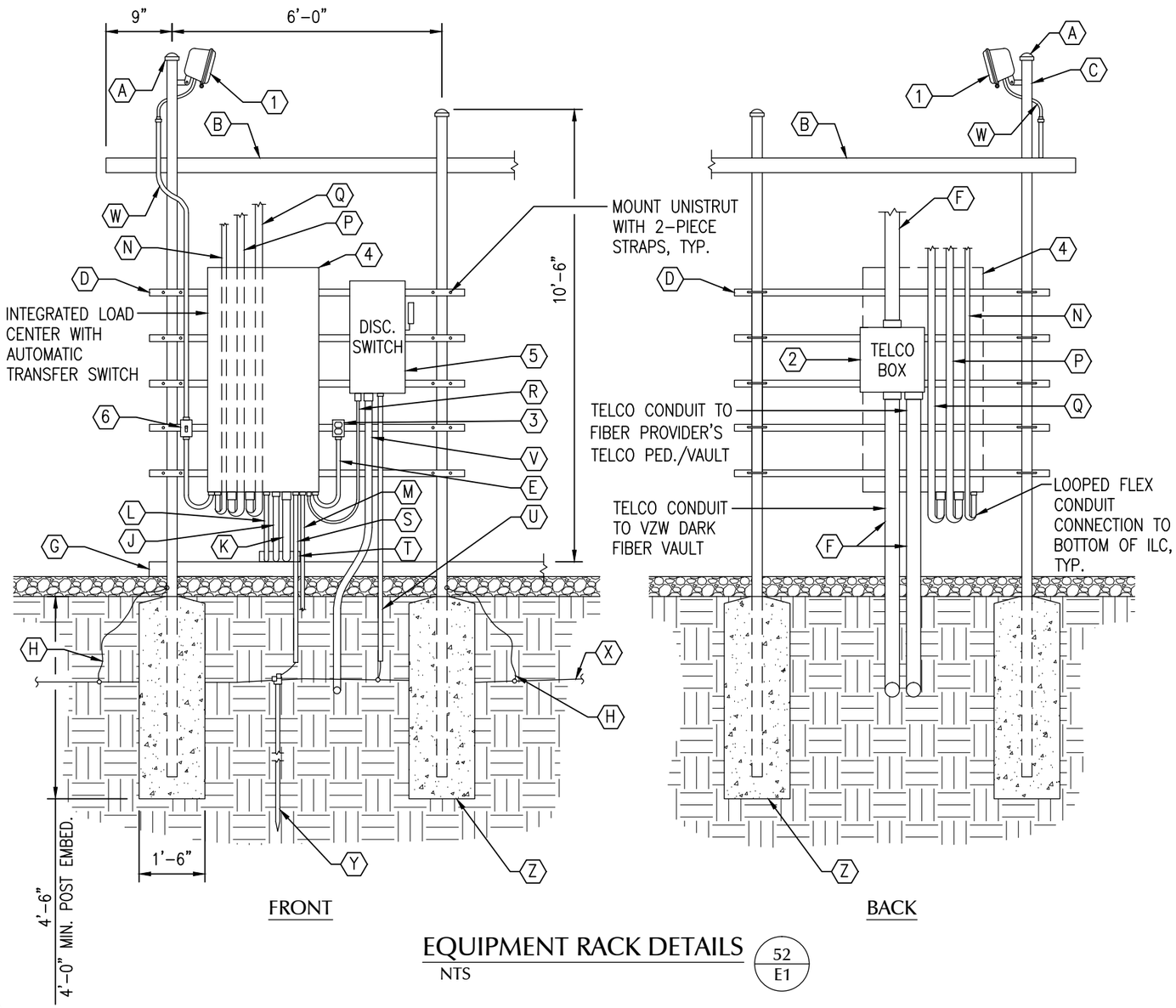

EQUIPMENT RACK DETAILS

NTS

52 / E1

KEY NOTES – CONDUIT, CONDUCTORS, & MISC.

- (A) GALVANIZED RIGID STEEL CAP, TYP.
- (B) ICE BRIDGE, SEE C SHEETS FOR ADDITIONAL DETAILS. ROUTE ALL NON–GENERATOR CONDUITS OVERHEAD ON ICE BRIDGE
- (C) 3" GALVANIZED RIGID STEEL PIPE, TYP. EXTEND H–FRAME OR ICE BRIDGE POST HIGHER TO SUPPORT AREA LIGHT FIXTURES AT LOCATIONS AS NOTED.
- (D) 1–5/8" x 1–5/8" GALVANIZED STEEL CHANNEL (UNISTRUT #P1000) W/PLASTIC END CAP (UNISTRUT #P2860), TYP.
- (E) 1/2" PVC CONDUIT FOR ROUTING POWER CONDUCTORS TO DUPLEX OUTLET.
- (F) 2" PVC CONDUIT WITH (3) 3/4" INNERDUCTS FOR TELCO CABLES.
- (G) SLAB BEHIND EQUIPMENT RACK.
- (H) (1) #2 AWG BARE SOLID TINNED COPPER GROUNDING ELECTRODE CONDUCTOR (GEC) FROM H–FRAME VERTICAL PIPE TO GROUND RING, EXOTHERMIC WELD BOTH ENDS.
- (J) 1–1/4" PVC CONDUIT FOR ROUTING GENERATOR CONTROL AND ALARM SIGNAL CABLES TO GENERATOR
- (K) 2" PVC CONDUIT FOR ROUTING POWER CONDUCTORS TO THE GENERATOR.
- (L) 3/4" PVC CONDUIT FOR ROUTING POWER CONDUCTORS TO THE GENERATOR BATTERY CHARGER AND BLOCK HEATER
- (M) 1/2" PVC CONDUIT FOR ROUTING POWER TO GFCI AT COMMON H–FRAME
- (N) 3/4" PVC CONDUIT FROM INTEGRATED LOAD CENTER (ILC) TO RBA72 FOR ALARM SIGNAL CABLES
- (P) 2" PVC CONDUIT FOR ROUTING POWER CONDUCTORS TO RBA72
- (Q) 2" PVC CONDUIT FOR ROUTING POWER CONDUCTORS TO RBS–6120
- (R) 2" PVC CONDUIT FOR ROUTING POWER CONDUCTORS FROM THE DISCONNECT SWITCH TO THE UTILITY BREAKER IN THE ILC.
- (S) 3/4" PVC WITH (1) – 2/0 BARE STRANDED TINNED COPPER GEC FROM GROUNDING LUG IN ILC TO GROUND ROD, EXOTHERMIC WELD GEC TO GROUND ROD.
- (T) CABLE TRAY, SEE SHEET C3B FOR ADDITIONAL DETAILS.
- (U) 3/4" PVC WITH (1) – 2/0 BARE STRANDED TINNED COPPER GEC FROM GROUNDING LUG IN DISCONNECT SWITCH TO GROUND RING, EXOTHERMIC WELD GEC TO GROUND RING.
- (V) 2" PVC CONDUIT FOR ROUTING POWER CONDUCTORS FROM THE UTILITY COMPANY METER TO THE DISCONNECT SWITCH.
- (W) 1/2" PVC CONDUIT FOR ROUTING POWER CONDUCTORS TO AREA LIGHTS.
- (X) GROUND RING, SEE SHEETS E2 AND E9 FOR ADDITIONAL DETAILS.
- (Y) GROUND ROD, EXOTHERMIC WELD TO GROUND RING, SEE DETAIL 49/E6.
- (Z) CONCRETE FOUNDATION FOR H–FRAME VERTICAL PIPE. CONCRETE SHALL HAVE A 28 DAY COMPRESSIVE STRENGTH OF 3,000 PSI.

LESSEE

TeleCAD Wireless
1961 NORTHPOINT BLVD, SUITE 130
HIXSON, TN 37343
PH: 423-843-9500
FAX: 423-843-9509

THE INFORMATION CONTAINED IN THIS SET OF DOCUMENTS IS PROPRIETARY BY NATURE. ANY USE OR DISCLOSURE OTHER THAN THAT WHICH RELATES TO THE CLIENT IS STRICTLY PROHIBITED.

A&E PROJECT #:	20171560879
DRAWN BY:	JSJ
CHECKED BY:	DMB

REVISIONS

NO.	DATE	BY	DESCRIPTION
D	12/5/17	CAD	PRELIMINARY REVIEW
C	11/22/17	CAD	PRELIMINARY REVIEW
B	11/01/17	CAD	PRELIMINARY REVIEW
A	08/29/17	JSJ	PRELIMINARY REVIEW

PROJECT No. 20171560879

SITE NAME: BELWOOD

SITE NUMBER: 443107

SITE ADDRESS: 156 PETE MAUNEY ROAD LAWNDALE, NC 28090

DESIGN TYPE: RAWLAND

SHEET TITLE: ELECTRICAL DETAILS

DRAWING NO. E6B

REVISION: D

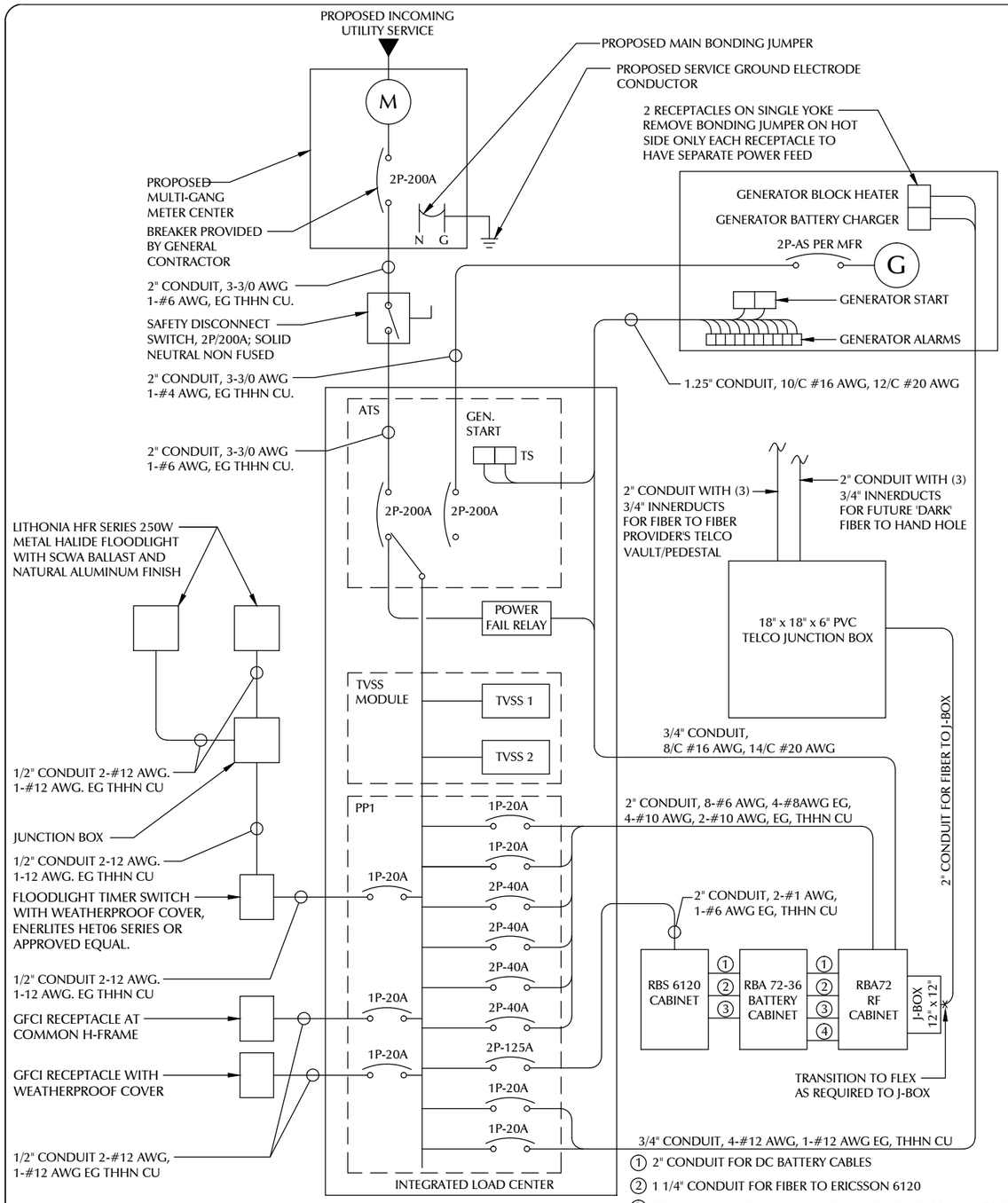

① 2" CONDUIT FOR DC BATTERY CABLES
② 1 1/4" CONDUIT FOR FIBER TO ERICSSON 6120
③ 3/4" CONDUIT FOR ALARMS FROM ERICSSON 6120 & RBA72-36
④ 3/4" CONDUIT FOR POWER TO GFCI OUTLET IN BATTERY CABINET

CONNECT DC POWER PLANT IN COMMSCOPE RBA72 CABINET TO 48 VOLT BATTERY STRINGS #1, #2, #3 LOCATED ON LOWER TWO SHELVES OF THE RBA72-36 BATTERY CABINET. CONNECT DC POWER IN ERICCSON RBS-6120 CABINET TO 48 VOLT BATTERY STRINGS #4, #5, #6 LOCATED ON UPPER TWO SHELVES OF THE RBA72-36 BATTERY CABINET. IN THE CASE WHERE NO RBS6120 IS USED, ALL THE APPLICABLE BATTERY STRINGS SHALL BE DIRECTLY CONNECTED TO THE RBA72 CABINET.

POWER & TELCO SINGLE LINE DIAGRAM

NTS

51 / E1

NOTES:

1. ELECTRICAL SERVICE SHALL BE 200A, 120V / 208V OR 240V, 1Ø 3W.
2. PROVIDE SERVICE ENTRANCE RATED FUSIBLE SERVICE DISCONNECT SWITCH IF REQUIRED BY LOCAL UTILITY COMPANY.
3. FOR COMPLETE INTERNAL WIRING AND ARRANGEMENT, REFER TO VENDOR PRINTS PROVIDED BY UTILITY CABINET MANUFACTURER.
4. INSTALL A 200A SERVICE DISCONNECT OTHER THAN MAIN BREAKER IN POWER PANEL (IF REQUIRED) REMOVE BONDING JUMPER IN UTILITY CABINET AND BOND SERVICE DISCONNECT PER NEC REQUIREMENTS.
5. ALL WIRING SHALL BE COPPER WITH THHN INSULATION.
6. ALL ELECTRICAL WORK INCLUDING COMPONENTS AND WIRING PER NATIONAL ELECTRICAL CODE (NEC), STATE AND LOCAL CODE.
7. GENERAL CONTRACTOR TO LABEL BREAKERS IN POWER CABINET AS NOTED ON "POWER PANEL SCHEDULE".
8. WALKING BEAM INTERLOCK SHALL BE PROVIDED WITH BREAKERS FROM INTEGRATED LOAD CENTER VENDOR, FIELD TO VERIFY.
9. THE GENERATOR USED IN CONJUNCTION WITH A 2-POLE AUTOMATIC TRANSFER SWITCH WITH A SOLID NEUTRAL IS NOT A SEPARATELY DERIVED SYSTEM. AS SUCH, DO NOT BOND THE NEUTRAL TO GROUND AT GENERATOR.
10. PRIOR TO PURCHASING EQUIPMENT, THE CONTRACTOR SHALL CONTACT THE ELECTRIC UTILITY AND OBTAIN IN WRITING THE MAXIMUM AVAILABLE FAULT CURRENT (AFC) AT THE UTILITY SERVICE POINT. PROVIDE MAX. AFC SIGNAGE AS REQUIRED PER NEC 110.24. THE CONTRACTOR SHALL ENSURE ALL ELECTRICAL EQUIPMENT, CIRCUIT BREAKERS, DISCONNECTS, FUSES, AND PANELBOARDS HAVE A FAULT CURRENT INTERRUPTING RATING GREATER THAN THE AVAILABLE FAULT CURRENT. IN NO CASE SHALL THE FAULT CURRENT INTERRUPTING RATING BE LESS THAN 10,000 AMPS.
11. PER NEC ART. 702 PROVIDE SIGNAGE AS FOLLOWS:
    A. AT PANEL PP1 AND DISCONNECT: "EMERGENCY POWER IS SUPPLIED BY STAND-BY GENERATOR LOCATED ON OTHER SIDE OF PAD."
    B. AT SERVICE DISCONNECT: (NOTE: OPENING EQUIPMENT DISCONNECT CAUSES GENERATOR TO START. TO REMOVE POWER ENTIRELY, THE GENERATOR BREAKER MUST BE OPEN.)

WARNING - SHOCK HAZARD EXISTS IF GROUNDING ELECTRODE CONDUCTOR OR BONDING JUMPER CONNECTION IN THIS EQUIPMENT IS REMOVED WHILE ALTERNATE SOURCE(S) IS ENERGIZED.

LOAD SERVED	kVA / phase A	kVA / phase B	Load Type	Circuit Breaker	Circuit Number		Circuit Breaker	Load Type	kVA / phase A	kVA / phase B	LOAD SERVED
Generator Battery Charger	0.30		C	1P-20	1	2	2P-40	C		2.88	RBA 72-30 Rectifier #1
Generator Block Heater		1.50	C	1P-20	3	4			2.88		
GFCI Receptacle H-Frame	0.18		NC	1P-20	5	6	2P-40	C		2.88	RBA 72-30 Rectifier #2
GFCI Receptacle RBA 72		0.18	NC	1P-20	7	8			2.88		
Area Floodlights	0.50		NC	1P-20	9	10	2P-40	C		2.88	RBA 72-30 Rectifier #3
Ericsson RBS 6120 (3 PSU's)		2.34	C	2P-125	11	12			2.88		
	2.34				13	14	2P-40	C		0.00	RBA 72-30 Rectifier #4 (FUTURE)
GFCI RECEPTACLE BATT-CAB		0.18	NC	1P-20	15	16			0.00		
GFCI RECEPTACLE COMMON H-FRAME	0.18		NC	1P-20	17	18					
					19	20					
					21	22					
					23	24					
					25	26					
TVSS		0.00	NC	2P-30	27	28					
	0.00				29	30					
Sub Total	3.50	4.20					Sub Total		8.64	8.64	Total

Panel Rating:	240/120 volt	1 Phase	3 Wire	LOAD DESCRIPTION		Connected kVA		NEC Demand	Demand kVA
Mounting:	Surface	NEMA 3R	Outdoor			A	B	Factor	A / B
Terminations:	75°C			General Lighting		0.00	0.00	125%	0.00 / 0.00
Isolated Ground Bus:	No			General Use Receptacles		0.36	0.36	≤ 10kVA@ 100%	0.36 / 0.36
Main Circuit Breaker:	No							> 10 kVA @ 50%	0.00 / 0.00
Service Entr. Rated:	No			Motors and Equipment	Largest	0.00	0.00	125%	0.00 / 0.00
Neutral to Ground Bond:	No				All other	0.00	0.00	100%	0.00 / 0.00
Minimum AIC, (kA):	TBD			Exterior Lighting		0.50	0.00	125%	0.63 / 0.00
MCB Rating:	MLO			Air Conditioning		0.00	0.00	100%	0.00 / 0.00
Bus Rating:	200A			Fixed Electric Space Heat		0.00	0.00	100%	0.00 / 0.00
Neutral Rating:	100%			Rectifiers		10.98	10.98	125%	13.73 / 13.73
Number of Branch Circuits	30			Dedicated Recept. Generator		0.30	1.50	125%	0.38 / 1.88
				Total kVA per Phase		12.14	12.84		15.09 / 15.96
Panel is inside an Integrated Load Center (ILC), 30 position (min.) with Built In ATS, TVSS Modules and AC Power Fail Relay				Total Demand Amperes per Phase					125.71 / 133.00
				Panel Feeder (Total kVA)					31.05
ALL LOADS PROVIDED BY VERIZON LOCAL MARKET				[(Total kVA) * 1000]/Volts = Total Amps for Service Feeder					129.35

POWER PANEL SCHEDULE

NTS

LESSEE

TeleCAD Wireless
1961 NORTHPOINT BLVD, SUITE 130
HIXSON, TN 37343
PH: 423-843-9500
FAX: 423-843-9509

THE INFORMATION CONTAINED IN THIS SET OF DOCUMENTS IS PROPRIETARY BY NATURE. ANY USE OR DISCLOSURE OTHER THAN THAT WHICH RELATES TO THE CLIENT IS STRICTLY PROHIBITED.

A&E PROJECT #:	20171560879
DRAWN BY:	JSJ
CHECKED BY:	DMB

REVISIONS

NO.	DATE	BY	DESCRIPTION
D	12/5/17	CAD	PRELIMINARY REVIEW
C	11/22/17	CAD	PRELIMINARY REVIEW
B	11/01/17	CAD	PRELIMINARY REVIEW
A	08/29/17	JSJ	PRELIMINARY REVIEW

PROJECT No.
20171560879

SITE NAME:
BELWOOD

SITE NUMBER:
443107

SITE ADDRESS:
156 PETE MAUNEY ROAD
LAWNDALE, NC 28090

DESIGN TYPE:
RAWLAND

SHEET TITLE:
SINGLE LINE DIAGRAM

DRAWING NO.: E7

REVISION: D

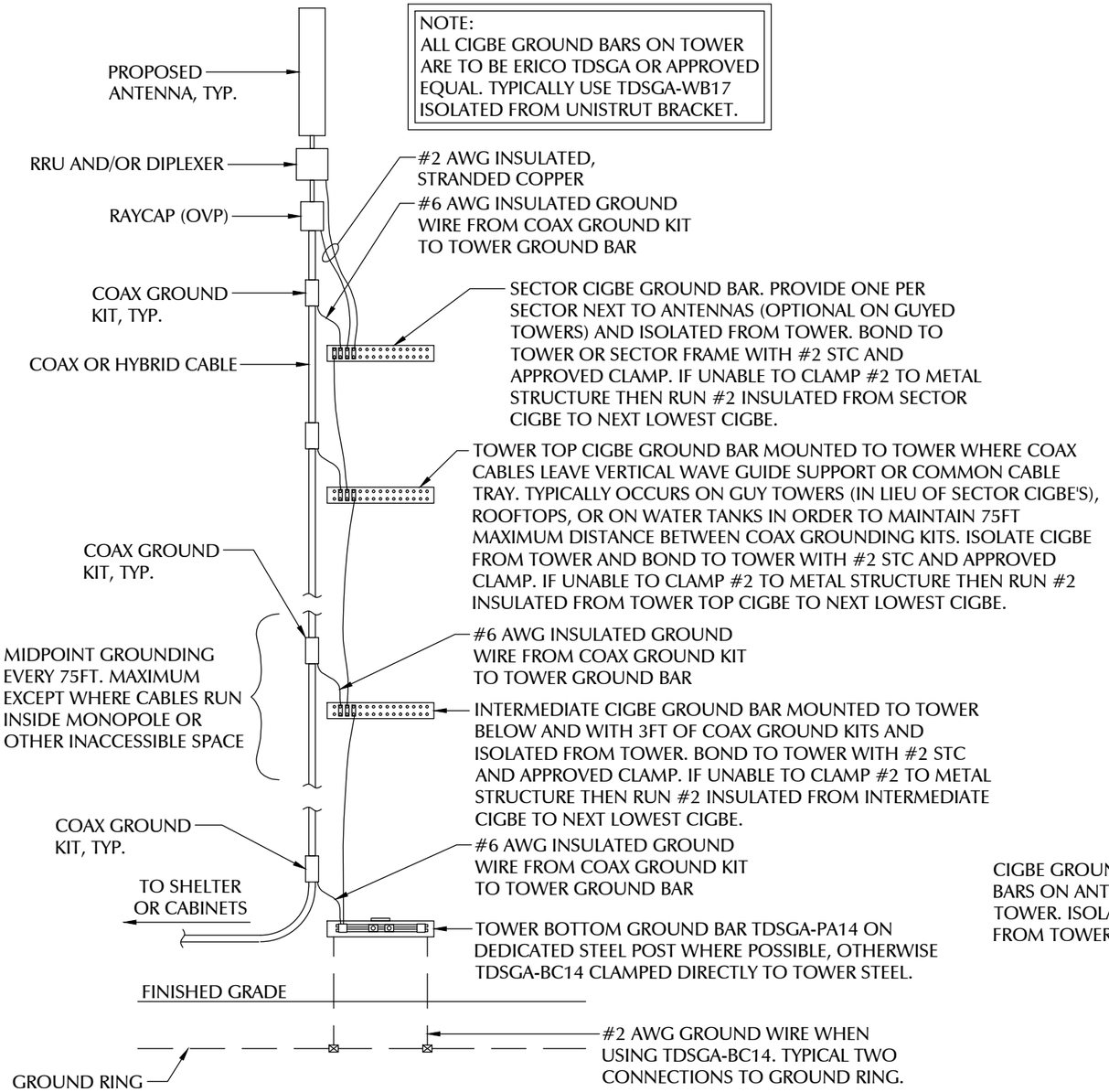

COAX/TOWER GROUNDING SCHEMATIC

NTS

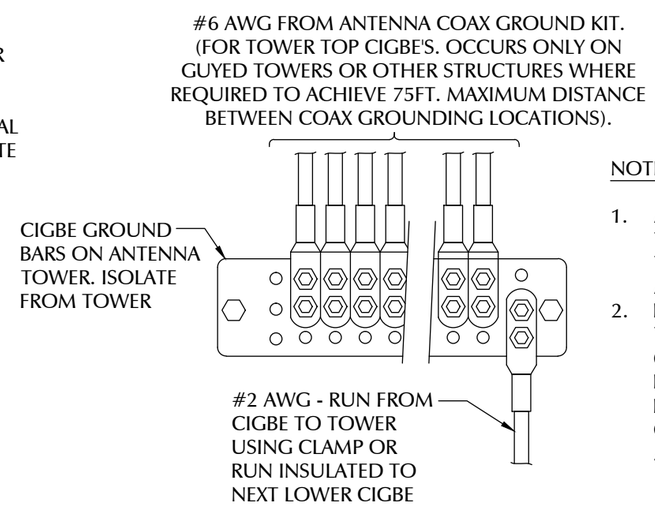

NOTES:

1. ALL CIGBE GROUND BARS ON TOWER ARE TO BE ERICO TDSGA. TYPICALLY USE TDSGA-WB17 ISOLATED FROM TOWER AND CONNECTED TO UNISTRUT BRACKET.
2. IF CIGBE CANNOT BE CONNECTED TO TOWER WITH #2 AWG AND CLAMP (OR CADWELD). THEN RUN #2 BLACK INSULATED GROUND LEAD FROM CIGBE DOWN TO NEXT LOWER CIGBE. SECURE GROUND LEAD WITH NON METALLIC TIES AT SAME SPACING AS COAX SUPPORTS.

ANTENNA GROUND WIRE INSTALLATION

NTS

44
E5

LESSEE

TeleCAD Wireless
1961 NORTHPOINT BLVD, SUITE 130
HIXSON, TN 37343
PH: 423-843-9500
FAX: 423-843-9509

THE INFORMATION CONTAINED IN THIS SET OF DOCUMENTS IS PROPRIETARY BY NATURE. ANY USE OR DISCLOSURE OTHER THAN THAT WHICH RELATES TO THE CLIENT IS STRICTLY PROHIBITED.

A&E PROJECT #:	20171560879
DRAWN BY:	JSJ
CHECKED BY:	DMB

REVISIONS

NO.	DATE	BY	DESCRIPTION
D	12/5/17	CAD	PRELIMINARY REVIEW
C	11/22/17	CAD	PRELIMINARY REVIEW
B	11/01/17	CAD	PRELIMINARY REVIEW
A	08/29/17	JSJ	PRELIMINARY REVIEW

PROJECT No.
20171560879

SITE NAME:
BELWOOD

SITE NUMBER:
443107

SITE ADDRESS:
156 PETE MAUNEY ROAD
LAWNDALE, NC 28090

DESIGN TYPE:
RAWLAND

SHEET TITLE:
ELECTRICAL DETAILS

DRAWING NO.
E8

REVISION:
D

NOTES:

1. CONNECT COAX GROUND KITS DIRECTLY TO TOWER TOP CIGBE ONLY AS NOTED ON DETAIL 2/E7A.
2. FOR GROUNDING CONNECTIONS AND DETAILS, SEE SITE GROUNDING PLAN.
3. TOWER GROUND BARS WILL BE ISOLATED FROM TOWERS BUT BONDED TO TOWER WITH #2 STC AND CLAMP (OR CADWELD) UNLESS NOTED OTHERWISE.
4. ALL #2 AWG TCW MUST BE SOLID TINNED.

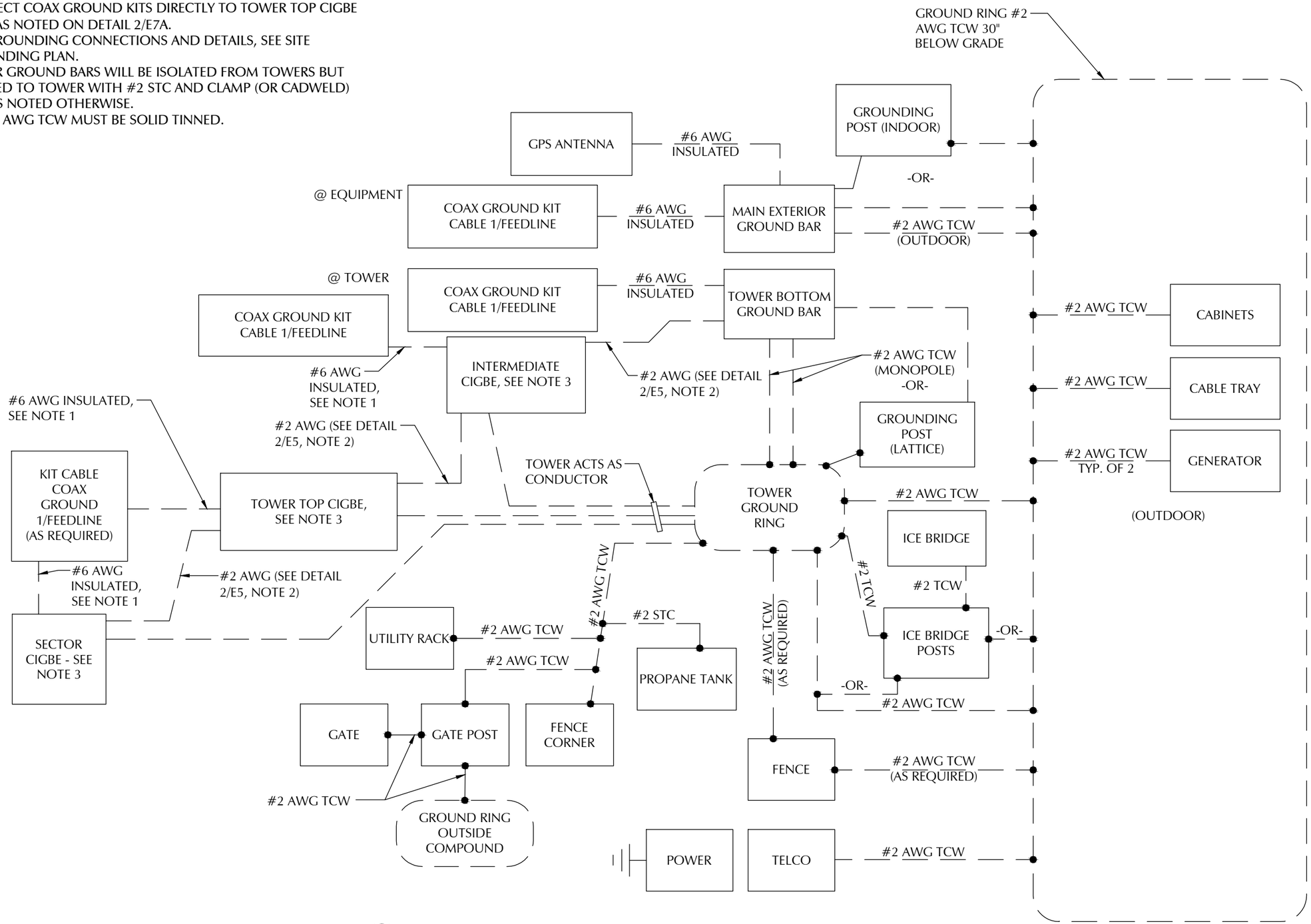

GROUNDING SYSTEM SINGLE LINE DIAGRAM

NTS

60 / E2

LESSEE

TeleCAD Wireless
1961 NORTHPOINT BLVD, SUITE 130
HIXSON, TN 37343
PH: 423-843-9500
FAX: 423-843-9509

THE INFORMATION CONTAINED IN THIS SET OF DOCUMENTS IS PROPRIETARY BY NATURE. ANY USE OR DISCLOSURE OTHER THAN THAT WHICH RELATES TO THE CLIENT IS STRICTLY PROHIBITED.

A&E PROJECT #:	20171560879
DRAWN BY:	JSJ
CHECKED BY:	DMB

REVISIONS

NO.	DATE	BY	DESCRIPTION
D	12/5/17	CAD	PRELIMINARY REVIEW
C	11/22/17	CAD	PRELIMINARY REVIEW
B	11/01/17	CAD	PRELIMINARY REVIEW
A	08/29/17	JSJ	PRELIMINARY REVIEW

PROJECT No.
20171560879

SITE NAME:
BELWOOD

SITE NUMBER:
443107

SITE ADDRESS:
156 PETE MAUNEY ROAD
LAWNDALE, NC 28090

DESIGN TYPE:
RAWLAND

SHEET TITLE:
GROUNDING SINGLE LINE

DRAWING NO.: E9

REVISION: D

PARENT PARCEL
A. KENNETH L. PHILLIPS &
IRIS B. PHILLIPS
DEED BOOK 1395, PAGE 0435
PARCEL 41652

ADJOINING PARCELS:
(Immediate Vicinity Only)
B. DEBBIE PHILLIPS BUCKNER
DEED BOOK 1417, PAGE 1914
PLAT BOOK 27, PAGE 29
PARCEL 58027

C. KEITH CARTER
DEED BOOK 1609, PAGE 0278
PARCEL 51768

NOTES:

1. THIS DRAWING IS BASED ON A SITE SURVEY BY CORDELL LAND SURVEYING, DATED 04-25-2017. CONTRACTOR SHALL FIELD VERIFY ALL EXISTING CONDITIONS PRIOR TO COMMENCEMENT OF CONSTRUCTION.
2. THE PROPOSED USE DOES NOT REQUIRE FULL OR PART TIME EMPLOYEES AT THE SITE.
3. FOR GENERAL SITE WORK NOTES, SEE SHEET GN1.
4. FOR ELECTRICAL SYMBOLS, SEE SHEETS E1 & E2.
5. ALL NORTH ARROWS ON SITE PLANS ARE TRUE NORTH, UNLESS OTHERWISE SPECIFIED.

REFERENCE NOTES:

5 - TOWER ELEVATION. SEE DETAIL SHEET C4.

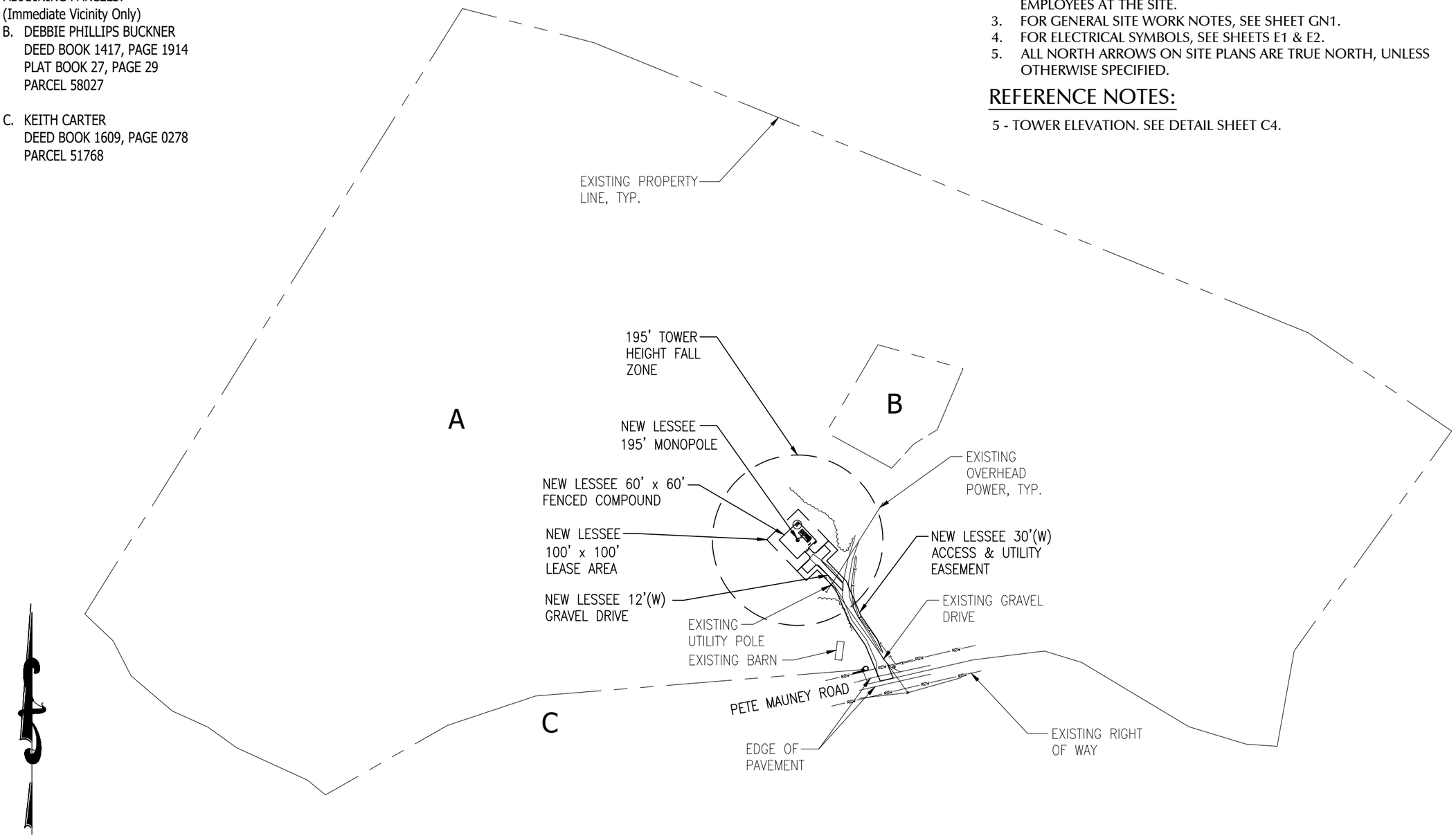

LESSEE

TeleCAD Wireless
1961 NORTHPOINT BLVD, SUITE 130
HIXSON, TN 37343
PH: 423-843-9500
FAX: 423-843-9509

THE INFORMATION CONTAINED IN THIS SET OF DOCUMENTS IS PROPRIETARY BY NATURE. ANY USE OR DISCLOSURE OTHER THAN THAT WHICH RELATES TO THE CLIENT IS STRICTLY PROHIBITED.

A&E PROJECT #:	20171560879
DRAWN BY:	JSJ
CHECKED BY:	DMB

REVISIONS

NO.	DATE	BY	DESCRIPTION
1	04/18/18	BES	ADDED FALL RADIUS
0	03/01/18	CAD	CONSTRUCTION ISSUE
D	12/5/17	CAD	PRELIMINARY REVIEW
C	11/22/17	CAD	PRELIMINARY REVIEW
B	11/01/17	CAD	PRELIMINARY REVIEW
A	08/29/17	JSJ	PRELIMINARY REVIEW

NORTH CAROLINA PROFESSIONAL SEAL NO. 032507 ENGINEER STEPHEN E. HUNT
04/18/18

RE PROJECT No.
20171560879

SITE NAME:
BELWOOD

SITE LOCATION CODE:
443107

SITE ADDRESS:
156 PETE MAUNEY ROAD
LAWNDALE, NC 28090

DESIGN TYPE:
RAWLAND

SHEET TITLE:
OVERALL SITE LAYOUT PLAN

DRAWING NO.
C1

REVISION:
1

COUNTY OF CLEVELAND, NORTH CAROLINA

AGENDA ITEM SUMMARY

Case 18-07

Department:

Agenda Title: Case 18-07: Request to rezone property at 133 Daves Road from Residential to Neighborhood Business Conditional District

Agenda Summary:

Proposed Action:

ATTACHMENTS:

File Name	Description
18-07_Staff_Report_133_Daves_Road.pdf	Staff Report
Maps.pdf	Maps
Site_Plan_Fall_Zone_Map.pdf	Site Plan with Fall Zones
18-07_cell_133_Daves_Rd_VZW_Big_Echo_site_plan.pdf	Site Plan

STAFF REPORT

To: Board of County Commissioners Date: April 13, 2018

From: Brian Epley County Manager

Via: Chris Martin, Senior Planner

Subject: Rezoning Case 18-07

Summary Statement: Chris Kinchen, with Faulk & Foster Real Estate, is requesting on behalf of Verizon Wireless to rezone a 100' x 100' portion of Parcel #54749, at 133 Daves Road from Residential (R) to Neighborhood Business Conditional District (NB-CD) for the purpose of placing a telecommunication tower on the property.

Review: Faulk & Foster has found a parcel of land that they wish to use for a telecommunication tower. Their stated purpose for this parcel is that there is poor cell signal in the Mooresboro area and a tower here will remedy that issue. Telecommunication towers are currently allowed in the Neighborhood Business, General Business, Light Industrial and Heavy Industrial zones. This parcel is currently zoned residential, as are parcels to the North, East and South. To the immediate West is Rutherford County. Neighborhood Business allows both residential and business uses that serve the surrounding community, as defined by our Code. The Land Use Plan calls the area Future Industrial and the Land Use Plan encourages the development of Commercial properties within the Future industrial area. A site plan has been submitted giving the metes and bounds of the lessee area requested for rezoning.

Per North Carolina General Statute 153A-341 the Board is required to craft a plan consistency statement giving explanation as to the Board's decision and how it relates to the land use plan utilizing one of the three below:

- A statement approving the proposed zoning amendment and describing its consistency with the Land Use Plan;
- A statement rejecting the proposed zoning amendment and describing its inconsistency with the Plan; or
- A statement approving the proposed amendment and declaring that this also amends the Plan, along with an explanation of the change in conditions to meet the development needs of the community that were taken into account in the zoning amendment.

Pros:

- The Future Land Use Plan calls for the creation of business uses in the Future Industrial Sections thus making rezoning to Neighborhood Business compatible with the Land Use Plan.
- A telecommunication tower will benefit the surrounding community by creating greater cell signal to residents in the Mooresboro area.

Cons:

- None

Recommendations:

- Planning Board: Planning Board will meet on 4/24/18.

Case # 18-07 Re-Zoning for 133 Daves Road, R to NB-CD
Aerial Map, Parcel #54749, 19.29 acres

Case # 18-07 Re-Zoning for 133 Daves Road, R to NB-CD
Current Zoning Designation, Parcel #54749, 19.29 acres

Rural Agriculture | Residential | Heavy Industrial | Light Industrial | Neighborhood Business

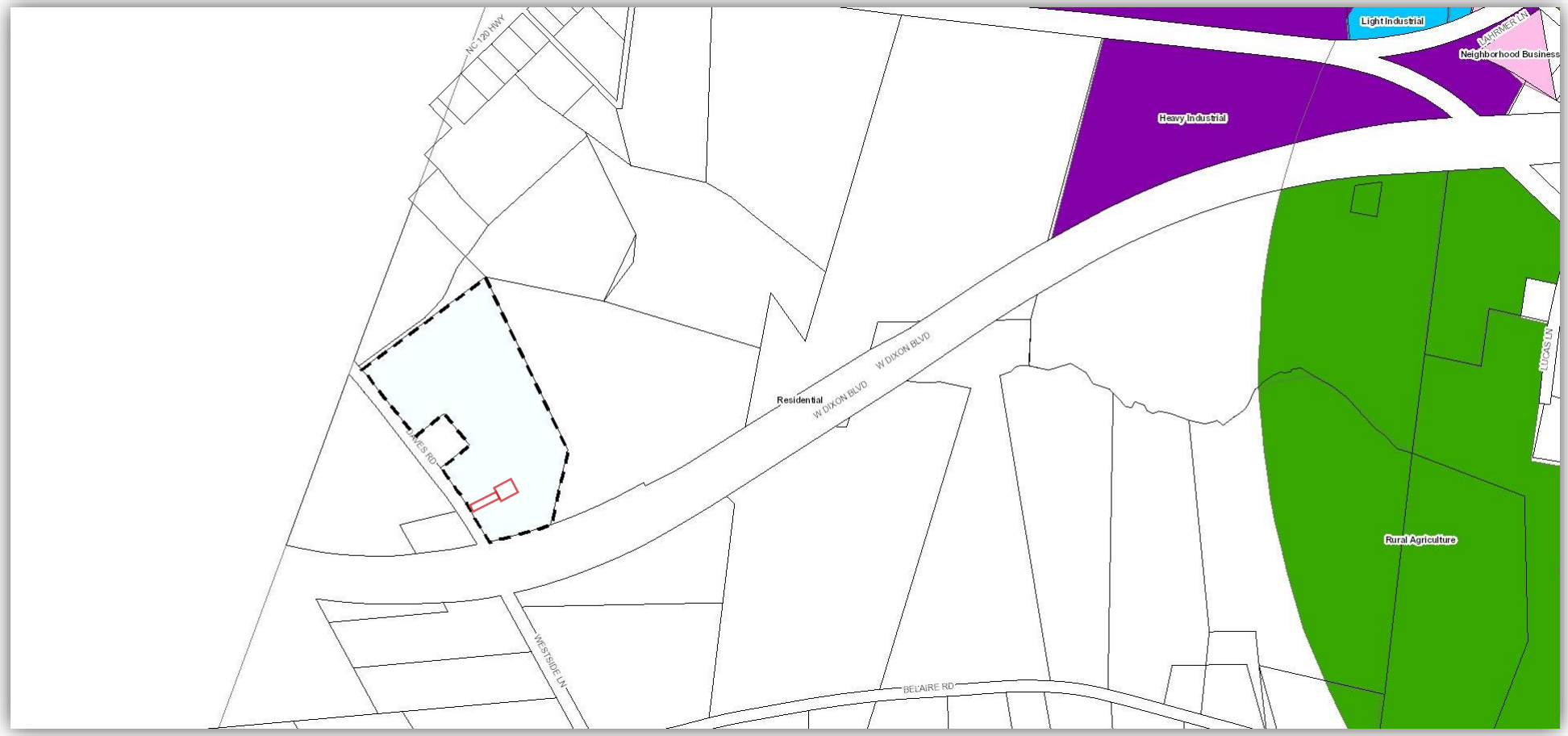

Case # 18-07 Re-Zoning for 133 Daves Road, R to NB-CD
Future Land Use Map, Parcel #54749, 19.29 acres

Industrial Residential Municipal

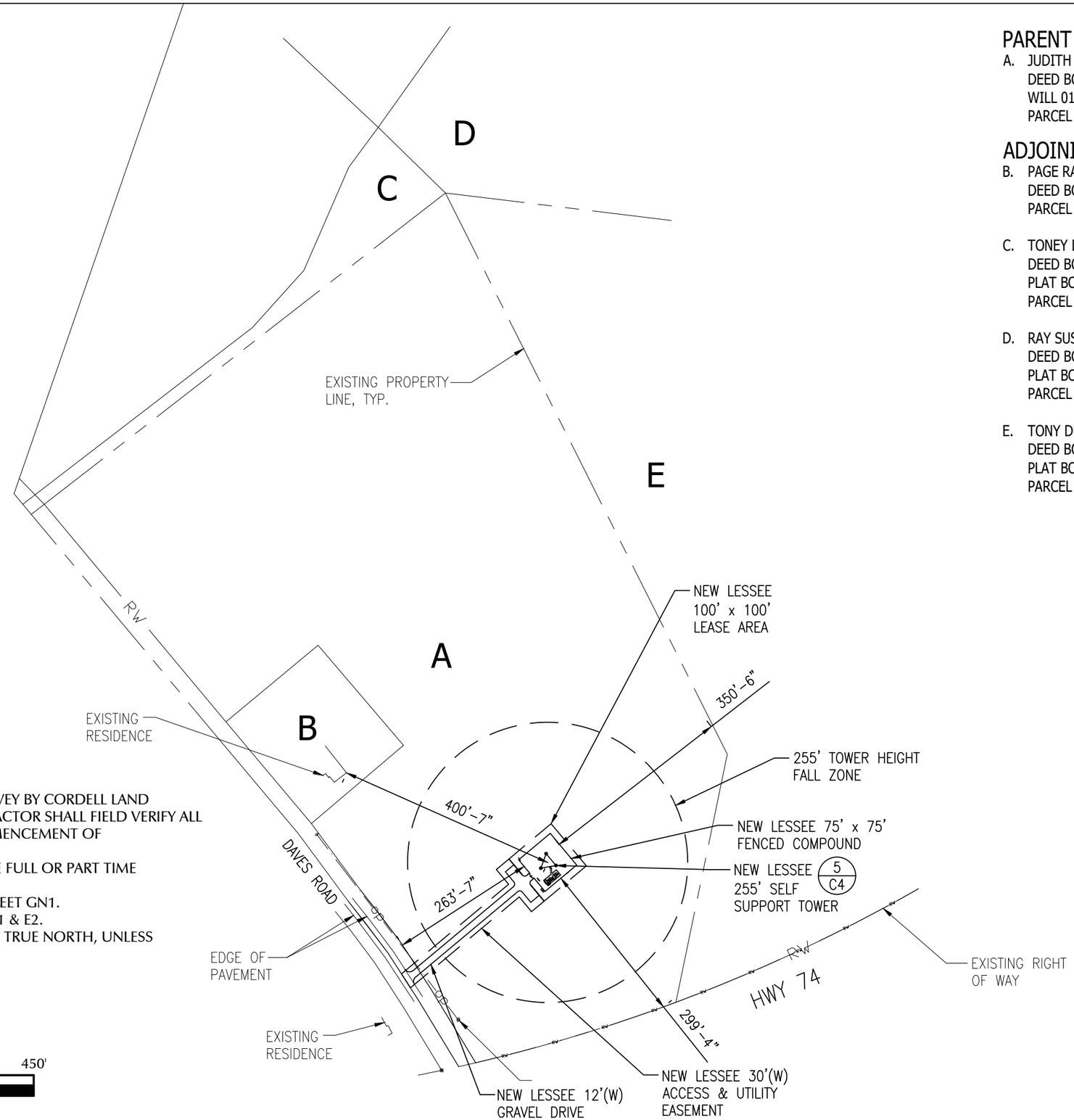

PARENT PARCEL

A. JUDITH D. YORK
DEED BOOK 1263, PAGE 2123
WILL 01 E 503
PARCEL 54749

ADJOINING PARCELS

B. PAGE RANDY DALE
DEED BOOK 1728, PAGE 2058
PARCEL 31719

C. TONEY DUSTIN C
DEED BOOK 1552, PAGE 1743
PLAT BOOK 34, PAGE 38
PARCEL 60570

D. RAY SUSAN HOLBERT
DEED BOOK 1494, PAGE 0979
PLAT BOOK 30, PAGE 3
PARCEL 59597

E. TONY DUSTIN C
DEED BOOK 1552, PAGE 1743
PLAT BOOK 34, PAGE 38
PARCEL 31693

NOTES:

1. THIS DRAWING IS BASED ON A SITE SURVEY BY CORDELL LAND SURVEYING, DATED 04-25-2017. CONTRACTOR SHALL FIELD VERIFY ALL EXISTING CONDITIONS PRIOR TO COMMENCEMENT OF CONSTRUCTION.
2. THE PROPOSED USE DOES NOT REQUIRE FULL OR PART TIME EMPLOYEES AT THE SITE.
3. FOR GENERAL SITE WORK NOTES, SEE SHEET GN1.
4. FOR ELECTRICAL SYMBOLS, SEE SHEETS E1 & E2.
5. ALL NORTH ARROWS ON SITE PLANS ARE TRUE NORTH, UNLESS OTHERWISE SPECIFIED.

REFERENCE NOTES:

5 - TOWER ELEVATION. SEE DETAIL SHEET C4.

0' 150' 300' 450'

SCALE: 1" = 150'

LESSEE

TeleCAD Wireless
1961 NORTHPOINT BLVD, SUITE 130
HIXSON, TN 37343
PH: 423-843-9500
FAX: 423-843-9509

THE INFORMATION CONTAINED IN THIS SET OF DOCUMENTS IS PROPRIETARY BY NATURE. ANY USE OR DISCLOSURE OTHER THAN THAT WHICH RELATES TO THE CLIENT IS STRICTLY PROHIBITED.

A&E PROJECT #:	20171560891
DRAWN BY:	JSJ
CHECKED BY:	DMB

REVISIONS

NO.	DATE	BY	DESCRIPTION
1	04/18/18	BES	ADDED FALL RADIUS
0	11/10/17	CAD	CONSTRUCTION ISSUE
D	10/30/17	CAD	PRELIMINARY REVIEW
C	10/23/17	CAD	PRELIMINARY REVIEW
B	09/22/17	CAD	PRELIMINARY REVIEW
A	08/11/17	JSJ	PRELIMINARY REVIEW

NORTH CAROLINA PROFESSIONAL SEAL NO. 032507 ENGINEER STEPHEN E. HUNT 04/18/18

PROJECT No.	20171560891
SITE NAME:	BIG ECHO
SITE NUMBER:	443109
SITE ADDRESS:	137 DAVES ROAD MOORESBORO, NC 28114
DESIGN TYPE:	RAWLAND
SHEET TITLE:	OVERALL SITE LAYOUT PLAN
DRAWING NO.	C1
REVISION:	1

PROJECT SUMMARY

SITE NAME:	BIG ECHO
SITE NUMBER:	443109
PROJECT NUMBER:	20171560891
SITE ADDRESS: (E911 VERIFIED)	137 DAVES ROAD MOORESBORO, NC 28114
JURISDICTION:	CLEVELAND COUNTY
COUNTY:	CLEVELAND COUNTY
TOWER OWNER:	VERIZON WIRELESS NORTH CAROLINA 8921 RESEARCH DRIVE CHARLOTTE, NC 28262
BRETT SLOUGH (VERIZON CONSTRUCTION)	(919) 218-9950
SITE COORDINATES:	1A
LATITUDE: LONGITUDE: ELEVATION:	35° 17' 50.02" N (NAD 83) 81° 43' 29.67" W (NAD 83) 944.7' (NAVD 88)
FLOOD ZONE:	ZONE "X"
OCCUPANCY:	UNMANNED
CONSTRUCTION TYPE:	RAWLAND
TELEPHONE COMPANY:	AT&T CONTACT: TBD PHONE: (800) 721-7811
POWER COMPANY:	DUKE ENERGY CONTACT: TBD PHONE: (828) 557-2000
FIRE DEPARTMENT:	NUMBER SEVEN TOWNSHIP FIRE DEPT. PHONE: (704) 434-7279
POLICE DEPARTMENT:	CLEVELAND COUNTY SHERIFFS DEPARTMENT PHONE: (704) 484-4888
E911 ADDRESSING:	CLEVELAND COUNTY ADDRESSING CONTACT: CHRIS MARTIN PHONE: (704) 489-4979
ZONING PROCESS:	FULL ZONING
BUILDING PERMIT PROCESS:	TBD

STATE COUNTY MAP

NORTH CAROLINA

verizon

8921 RESEARCH DRIVE
CHARLOTTE, NC 28262
ATTN: BRETT SLOUGH - (919) 218-9950

SITE NAME: BIG ECHO
137 DAVES ROAD
MOORESBORO, NC 28114

VICINITY MAP

NOT TO SCALE

LOCATION MAP

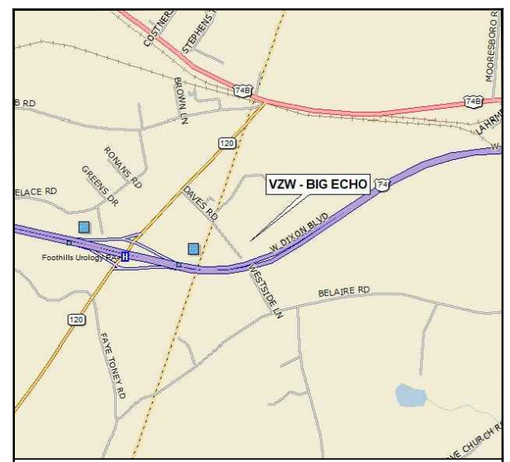

NOT TO SCALE

DRIVING DIRECTIONS

FROM VERIZON OFFICE, CHARLOTTE, NC:

HEAD SOUTHWEST ON RESEARCH DR. TURN LEFT ONTO W WT HARRIS BLVD. TURN RIGHT ONTO THE INTERSTATE 85 S RAMP. CONTINUE TO CROWDERS MOUNTAIN. TAKE EXIT 10B FROM I-85 S. MERGE ONTO I-85 S. TAKE EXIT 10B TO MERGE ONTO US-74 W TOWARD KINGS MOUNTAIN/SHELBY. MERGE ONTO US-74 W. CONTINUE ONTO US-74 W/W DIXON BLVD. TAKE EXIT 189 FOR NC-120. TURN RIGHT ONTO NC-120 N. TURN RIGHT ONTO DAVES RD. THE SITE WILL BE ON THE LEFT.

SHEET SCALE FACTOR:

PLOT SIZE:
11"x17": "TO SCALE"
24"x36": 2X SCALE AS NOTED

1 (800) 632-4949
www.nc811.com
CONTRACTOR TO CALL NORTH CAROLINA ONE-CALL SYSTEMS AT LEAST (2) WORKING DAYS PRIOR TO DIGGING.

SHEET INDEX

NO.	DESCRIPTION
T1	TITLE SHEET
LS1	LAND SURVEY
LS2	LAND SURVEY
LS3	LAND SURVEY
LS4	LAND SURVEY
GN1	GENERAL NOTES
C1	OVERALL SITE LAYOUT PLAN
C1A	SITE GRADING PLAN
C2	SITE LAYOUT PLAN
C2A	ENLARGED LAYOUT PLAN
C2B	EQUIPMENT LAYOUT PLAN
C3	SITE DETAILS
C3A	SITE DETAILS
C3B	SITE DETAILS
C4	SITE DETAILS
C4A	SITE DETAILS
C5	SITE DETAILS
C6	FENCE DETAILS
L1	LANDSCAPE PLAN
L2	LANDSCAPE DETAILS
E1	ELECTRICAL SITE PLAN
E2	SITE GROUNDING PLAN
E2A	EQUIPMENT GROUNDING PLAN
E2B	GROUNDING NOTES
E3	ELECTRICAL SPECIFICATIONS
E4	ELECTRICAL DETAILS
E5	ELECTRICAL DETAILS
E6	ELECTRICAL DETAILS
E6A	ELECTRICAL DETAILS
E6B	ELECTRICAL DETAILS
E7	SINGLE LINE DIAGRAM
E8	ELECTRICAL DETAILS
E9	GROUNDING SINGLE LINE

LESSEE

TeleCAD Wireless
1961 NORTHPOINT BLVD, SUITE 130
HIXSON, TN 37343
PH: 423-843-9500
FAX: 423-843-9509

THE INFORMATION CONTAINED IN THIS SET OF DOCUMENTS IS PROPRIETARY BY NATURE. ANY USE OR DISCLOSURE OTHER THAN THAT WHICH RELATES TO THE CLIENT IS STRICTLY PROHIBITED.

A&E PROJECT #:	20171560891
DRAWN BY:	JSJ
CHECKED BY:	DMB

REVISIONS

NO.	DATE	BY	DESCRIPTION
5	11/10/17	CAD	CONSTRUCTION ISSUE
4	10/30/17	CAD	PRELIMINARY REVIEW
3	10/23/17	CAD	PRELIMINARY REVIEW
2	09/22/17	CAD	PRELIMINARY REVIEW
1	08/11/17	JSJ	PRELIMINARY REVIEW

NORTH CAROLINA PROFESSIONAL SEAL NO. 032507 ENGINEER STEPHEN E. HUNT 11/10/17

PROJECT No.
20171560891

SITE NAME:
BIG ECHO

SITE NUMBER:
443109

SITE ADDRESS:
137 DAVES ROAD
MOORESBORO, NC 28114

DESIGN TYPE:
RAWLAND

SHEET TITLE:
TITLE SHEET

DRAWING NO. T1
REVISION: 0

11/10/2017 2:07:58 PM, coreyday

NORTH ORIENTATION

NORTH CAROLINA STATE PLANE COORDINATE SYSTEM
Based on GPS Survey relative to NGS CORS Network

Grid to True North Convergence: −1° 34' 22"
Combined GPS Scale Factor: 0.99982772
Magnetic Declination 7° 10' W ± 21'

PROPOSED TOWER DATA

CENTER OF TOWER (NAD 83)
LATITUDE: 35° 17' 50.02" NORTH
LONGITUDE: 81° 43' 29.67" WEST

GROUND ELEVATION: 944.7 FEET
AMSL, NAVD88, Based on GPS Survey
CORS Benchmark: DM3995 NCRO

SITE LOCATION

SITE ADDRESS
Daves Road
Mooresboro, NC 28114

VICINITY MAP

NOT TO SCALE

CORDELL
LAND SURVEYING
2857 Camp Creek Road,
Murphy, NC 28906
(828) 494-7058

PREPARED FOR
verizon
CELLCO PARTNERSHIP
D/B/A Verizon Wireless

SURVEYOR'S CERTIFICATION:

SURVEYOR'S CERTIFICATION:

To Cellco Partnership, d/b/a Verizon Wireless and Clark Law, P.C.:

This is to certify that this map or plat and the survey on which it is based were made in accordance with "Minimum Standard Detail Requirements for ALTA/NSPS Land Title Surveys," jointly established and adopted by ALTA, and NSPS. Pursuant to the Accuracy Standards as adopted by ALTA and NSPS and in effect on the date of this certification, undersigned further certifies that;

* the survey measurements were made in accordance with the "Minimum Angle, Distance, and Closure Requirements for Survey Measurements Which Control Land Boundaries for ALTA/NSPS Land Title Surveys."

NORTH CAROLINA PROFESSIONAL SEAL L-3037 LAND SURVEYOR DONALD L. CORDELL

Donald Cordell,
North Carolina License No. 3037

SURVEYOR'S NOTES:

1. This is a Rawland Tower Survey, made on the ground under the supervision of a Registered Land Surveyor. Date of field survey is June 28, 2017.
2. Instruments Used: Topcon GTS 212 and Prism, Topcon Hiperlite Plus GPS, TDS Nomad and/or Carlson Surveyor Data Collector.
3. Surveyor hereby states the Geodetic Coordinates and the elevation shown for the proposed centerline of the tower are accurate to within +/− 15 feet horizontally and to within +/− 3 feet vertically (FAA Accuracy Code 1A).
4. Survey shown hereon conforms to the Minimum Requirements as set forth by the State Board for a Category "II" Survey: Field data upon which this map or plat is based has a closure precision of not less than one−foot in 7,500 feet (1:7,500) and an angular error that does not exceed 15 seconds times the square root of the number of angles turned. Field traverse did not require adjustment.
5. Benchmark used is a Continuously Operating Reference Station (CORS) as noted hereon. Onsite benchmark is as shown hereon. Elevations shown are in US Survey Feet and refer to NAVD 88.
6. No underground utilities, underground encroachments or building foundations were measured or located as a part of this survey, unless otherwise shown. Trees and shrubs not located, unless otherwise shown.
7. This survey was conducted for the purpose of a Rawland Tower Survey only, and is not intended to delineate the regulatory jurisdiction of any federal, state, regional or local agency, board, commission or other similar entity.
8. Attention is directed to the fact that this survey may have been reduced or enlarged in size due to reproduction. This should be taken into consideration when obtaining scaled data.
9. This survey is not valid without the original signature and the original seal of a State−Licensed Land Surveyor.
10. This survey does not constitute a complete boundary survey of the Parent Tract, or adjoining Parcels.
11. This Survey was conducted with the benefit of a Title Examination, see Sheet #2.

FLOOD NOTES:

By graphic plotting only, Lessee's Land Space & Access & Utility R/W appear to lie within ZONE "X" per F.E.M.A (Non−Printed) Flood Insurance Rate Map Community Panel No. 3710158700J.

Zone "X": Areas determined to be outside the 0.2% annual chance floodplain.

LEGEND

- 5/8in CAPPED IRON ROD SET
- CONCRETE MONUMENT FOUND
- UTILITY POLE

R/W	RIGHT-OF-WAY
POB	POINT OF BEGINNING
POC	POINT OF COMMENCEMENT
R/W	RIGHT-OF-WAY
Sq Ft	SQUARE FEET

- PAVEMENT EDGE
- OHU — OVERHEAD UTILITY LINES
- RW — PUBLIC R/W
- TAX PARCEL BOUNDARY
- RIGHT-OF-WAY CENTER LINE
- EXISTING EASEMENT
- TIE LINE
- ACCESS/UTILITY R/W
- LAND SPACE

RAWLAND TOWER SURVEY
SITE NAME:
BIG ECHO
Site Number: 443109
Daves Road, Mooresboro, NC 28114
Number Seven Township, Cleveland County, North Carolina

SURVEY DATE: 07−06−2017

DRAWN BY: NB
CHECKED BY: TLS
FIELD CREW: TLS
APPROVED BY: TLS

COVER SHEET

PROPERTY INFORMATION

PARENT PARCEL

A. JUDITH D. YORK
DEED BOOK 1263, PAGE 2123
WILL 01 E 503
PARCEL 54749

ADJOINING PARCELS

B. PAGE RANDY DALE
DEED BOOK 1728, PAGE 2058
PARCEL 31719

C. TONEY DUSTIN C
DEED BOOK 1552, PAGE 1743
PLAT BOOK 34, PAGE 38
PARCEL 60570

D. RAY SUSAN HOLBERT
DEED BOOK 1494, PAGE 0979
PLAT BOOK 30, PAGE 3
PARCEL 59597

E. TONY DUSTIN C
DEED BOOK 1552, PAGE 1743
PLAT BOOK 34, PAGE 38
PARCEL 31693

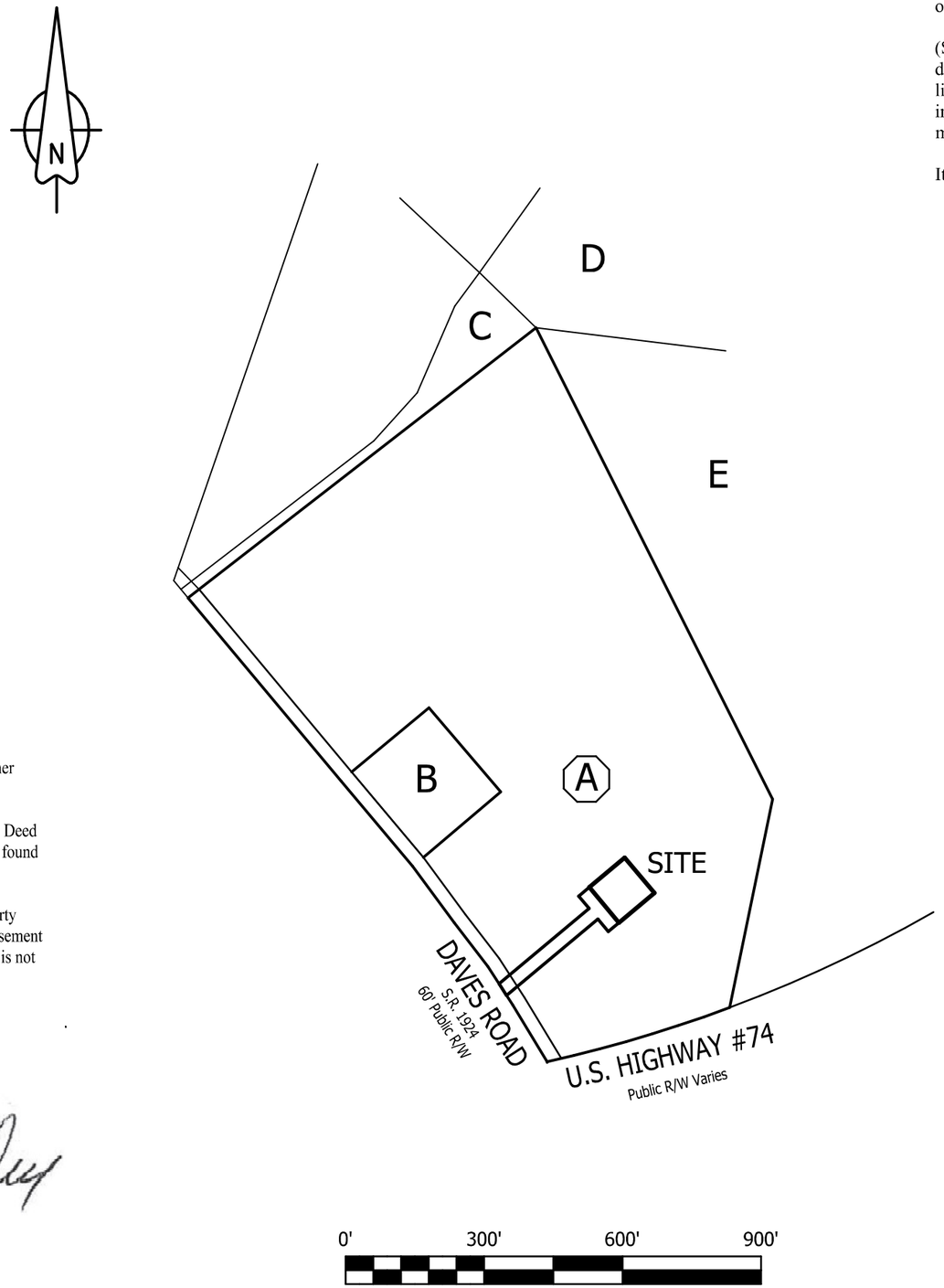

SURVEY & MAP CAVEATS:

Surveyed information hereon includes Topography and other features as shown on Boundary Sheets.

Parcel Boundary information is shown according to Plat & Deed data relative to monuments and other property evidence as found and shown hereon. No Boundary Survey performed.

Public R/W shown according to available Plat data. Property extends to Centerline Daves Road per Deed. Status (as Easement or Dedicated R/W) of Right-of-Way of U.S. Highway #74 is not addressed herein.

NORTH CAROLINA PROFESSIONAL SEAL L-3087 LAND SURVEYOR DONALD L. CORDELL

SURVEYOR'S NOTES ON TITLE EXAMINATION

Reference: Report of Title, prepared by Fidelity National Title Insurance Company, Order No: 25371331, Issue Date: 06-28-2017, issued in respect of Parent Parcel.

(Surveyor's treatment of Title Examination Items is limited to the scope described in ALTA/NSPS 2016 requirements, Section 6. C. ii., and is limited to determination of the *extent of land*, that Title Items may influence, if any. Surveyor may indicate where review by Title Attorney may be warranted.)

Item 1: Taxes: Not subject to representation on Survey Map.

CORDELL
LAND SURVEYING
2857 Camp Creek Road,
Murphy, NC 28906
(828) 494-7058

PREPARED FOR

verizon

CELLCO PARTNERSHIP
D/B/A Verizon Wireless

RAWLAND TOWER SURVEY
SITE NAME:
BIG ECHO
Site Number: 443109
Daves Road, Mooresboro, NC 28114
Number Seven Township, Cleveland County, North Carolina

SURVEY DATE: 07-06-2017

SCALE: 1in = 300'
DRAWN BY: NB
CHECKED BY: TLS
FIELD CREW: TLS
APPROVED BY: TLS

OVERVIEW

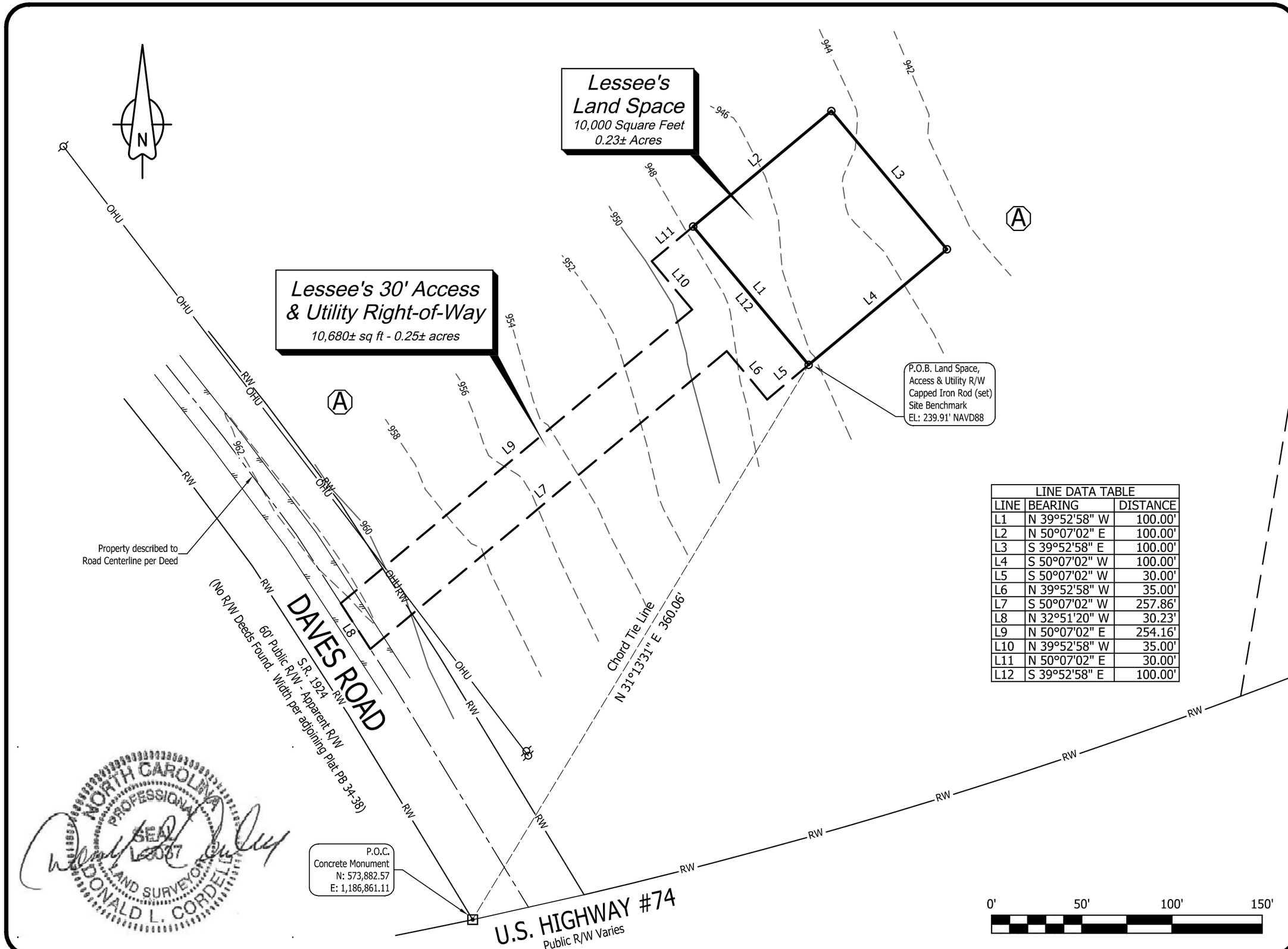

LINE DATA TABLE		
LINE	BEARING	DISTANCE
L1	N 39°52'58" W	100.00'
L2	N 50°07'02" E	100.00'
L3	S 39°52'58" E	100.00'
L4	S 50°07'02" W	100.00'
L5	S 50°07'02" W	30.00'
L6	N 39°52'58" W	35.00'
L7	S 50°07'02" W	257.86'
L8	N 32°51'20" W	30.23'
L9	N 50°07'02" E	254.16'
L10	N 39°52'58" W	35.00'
L11	N 50°07'02" E	30.00'
L12	S 39°52'58" E	100.00'

CORDELL
LAND SURVEYING
2857 Camp Creek Road,
Murphy, NC 28906
(828) 494-7058

PREPARED FOR

verizon

CELLCO PARTNERSHIP
D/B/A Verizon Wireless

RAWLAND TOWER SURVEY

SITE NAME:
BIG ECHO
Site Number: 443109
Daves Road, Mooresboro, NC 28114
Number Seven Township, Cleveland County, North Carolina

SURVEY DATE: 07-06-2017

SCALE: 1in = 50'
DRAWN BY: NB
CHECKED BY: TLS
FIELD CREW: TLS
APPROVED BY: TLS

LESSEE'S BOUNDARIES

SHEET 3 OF 4

SURVEYOR'S DESCRIPTIONS

LESSEE'S LAND SPACE (PROPOSED):

Situated in the Number Seven Township, Cleveland County, North Carolina. Known as being a 10,000 square feet Lessee's Land Space over and upon Tax Parcel Number 54749, Cleveland County, North Carolina, being property now or formerly conveyed to Judith D. York, of record in Deed Book 1263, Page 2123, and Will Document 01 E 503, in the Cleveland County Registry, and being more particularly described as follows:

COMMENCE at a Concrete Monument (found), on the Northern Right-of-Way Line of U.S. Highway #74, located at North Carolina State Plane Coordinates: N: 573,882.57, E: 1,186,861.11;
Thence along a Chord Tie line, having a bearing of N 31°13'31" E, a distance of 360.06 feet to a 5/8in Capped Iron Rod (set), which is the Point of Beginning of the Lessee's Land Space described herein;

Thence N 39°52'58" W, a distance of 100.00 feet to a 5/8-inch Capped Iron Rod (set);
Thence N 50°07'02" E, a distance of 100.00 feet to a 5/8-inch Capped Iron Rod (set);
Thence S 39°52'58" E, a distance of 100.00 feet to a 5/8-inch Capped Iron Rod (set);
Thence S 50°07'02" W, a distance of 100.00 feet to the Point of Beginning and containing 0.23 Acres (10,000 Square Feet) more or less.

LESSEE'S 30' ACCESS & UTILITY RIGHT-OF-WAY (PROPOSED):

Situated in the Number Seven Township, Cleveland County, North Carolina. Known as being a 10,680 square feet Lessee's 30' Access & Utility Right-of-Way over and upon Tax Parcel Number 54749, Cleveland County, North Carolina, being property now or formerly conveyed to Judith D. York, of record in Deed Book 1263, Page 2123, and Will Document 01 E 503, in the Cleveland County Registry, and being more particularly described as follows:

COMMENCE at a Concrete Monument (found), on the Northern Right-of-Way Line of U.S. Highway #74, located at North Carolina State Plane Coordinates: N: 573,882.57, E: 1,186,861.11;
Thence along a Chord Tie line, having a bearing of N 31°13'31" E, a distance of 360.06 feet to a 5/8in Capped Iron Rod (set), which is the Point of Beginning of the Lessee's 30' Access & Utility Right-of-Way described herein;

Thence S 50°07'02" W, a distance of 30.00 feet;
Thence N 39°52'58" W, a distance of 35.00 feet;
Thence S 50°07'02" W, a distance of 257.86 feet to a point on the Southwest Line of aforesaid Parcel, which is also the centerline of Daves Road, also known as SR 1924;
Thence N 32°51'20" W, along said Line, a distance of 30.23 feet;
Thence N 50°07'02" E, leaving said Line, a distance of 254.16 feet;
Thence N 39°52'58" W, a distance of 35.00 feet;
Thence N 50°07'02" E, a distance of 30.00 feet to a 5/8-inch Capped Iron Rod (set);
Thence S 39°52'58" E, a distance of 100.00 feet to the Point of Beginning and containing 0.25 Acres (10,680 Square Feet) more or less.

NORTH CAROLINA PROFESSIONAL SEAL L-3637 LAND SURVEYOR DONALD L. CORDELL

LEGAL DESCRIPTION OF PARENT PARCEL

Property located in Cleveland, NC

Lying in Colfax Township, Rutherford County, North Carolina, and Number Seven (7) Township, Cleveland County, North Carolina.

Being a part of the C.L. Daves and wife, Eva Daves, farm the tract hereby conveyed being described according to survey by Clyde Fesperman and Ronnie Dedmon, July 26, 1974, as follows:

Beginning at a stake or point in the center of the median between the traveled portions of U.S. Highway 74 where the old line crossed said median and runs thence North 26 degrees 01 minute West 315.16 fet to an old iron pin corner; thence North 28 degrees 37 minutes West 46.33 feet to an old iron pin corner in the old Davis Road; thence with it North 31 degrees 27 minutes West 230 feet to a stake in the center of said road; thence leaving the road North 52 degrees 59 minutes East 210 feet to a stake; thence North 37 degrees 01 minute West 210 feet to stake; thence South 52 degrees 59 minutes West 210 feet to a stake in the center of the old Davis Road; thence with it North 37 degrees 01 minute West 412.38 feet to an iron spike, corner of 11.92 acre tract; thence with line of same North 53 degrees 23 minutes East 842.42 feet to an iron pin in line of 86.16 acre tract; thence with line of same South 25 degrees 27 minutes East 994.05 feet to a stake; thence South 13 degrees 04 minutes West 565.38 feet to a stake in the center of the median between the traveled portions of U.S. Highway 74; thence with the center of said median a westward course 328.33 feet to the beginning, containing 19.29 acres.

Subject to Highway 74 right-of-way which covers 1.31 acres.

AND BEING the same property conveyed to Wayne S. York and Judith D. York from Frances Daves McKnight and Rodney L. McKnight, Eva Daves, by and through her attorney in fact Sara Daves McKnight, and Madeline Daves Kendrick by North Carolina General Warranty Deed dated December 29, 1999 and recorded January 07, 2000 in Deed Book 1263, Page 2123. Said Wayne S. York having departed this earth on or about September 23, 2001.

Tax Parcel No. 54749

CORDELL
LAND SURVEYING
2857 Camp Creek Road,
Murphy, NC 28906
(828) 494-7058

PREPARED FOR
verizon
CELLCO PARTNERSHIP
D/B/A Verizon Wireless

RAWLAND TOWER SURVEY
SITE NAME:
BIG ECHO
Site Number: 443109
Daves Road, Mooresboro, NC 28114
Number Seven Township, Cleveland County, North Carolina

SURVEY DATE: 07-06-2017

DRAWN BY: NB
CHECKED BY: TLS
FIELD CREW: TLS
APPROVED BY: TLS

DESCRIPTIONS & TITLE
SHEET 4 OF 4

GENERAL NOTES

1. PRIOR TO THE START OF CONSTRUCTION, THE CONTRACTOR SHALL BE RESPONSIBLE FOR ENSURING THAT ALL REQUIRED PERMITS AND APPROVALS HAVE BEEN OBTAINED. NO CONSTRUCTION OR FABRICATION SHALL BEGIN UNTIL THE CONTRACTOR HAS RECEIVED AND THOROUGHLY REVIEWED ALL PLANS AND OTHER DOCUMENTS APPROVED BY ALL APPLICABLE PERMITTING AUTHORITIES.

2. ALL WORK SHALL BE PERFORMED IN ACCORDANCE WITH THESE PLANS AND THE CODES, REGULATIONS, AND STANDARDS OF ALL APPLICABLE GOVERNING AUTHORITIES.

3. THE GENERAL CONTRACTOR SHALL VERIFY THAT ALL EXISTING TOPOGRAPHY AND HORIZONTAL GEOMETRY IS AS INDICATED ON THESE DRAWINGS. NO ADDITIONAL COMPENSATION SHALL BE PAID TO THE CONTRACTOR FOR DAMAGE OR REPAIR TO THESE FACILITIES CAUSED BY THE CONTRACTOR'S WORK FORCE. IMMEDIATELY NOTIFY THE LESSEE'S CONSTRUCTION MANAGER OF ANY DISCREPANCIES OR INTERFERENCE WHICH AFFECT THE WORK OF THIS CONTRACT.

4. THE CONTRACTOR SHALL MAINTAIN ADEQUATE DRAINAGE AT ALL TIMES. DO NOT ALLOW WATER TO STAND OR POND. ANY DAMAGE TO STRUCTURES OR WORK ON THE SITE CAUSED BY INADEQUATE MAINTENANCE OF DRAINAGE PROVISIONS WILL BE THE RESPONSIBILITY OF THE CONTRACTOR AND ANY COST ASSOCIATED WITH REPAIRS FOR SUCH DAMAGE WILL BE AT THE CONTRACTOR'S EXPENSE.

5. ALL WASTE MATERIAL SHALL BE PROPERLY DISPOSED OF OFF-SITE OR AS DIRECTED BY THE LESSEE'S CONSTRUCTION MANAGER AND IN ACCORDANCE WITH JURISDICTIONAL AUTHORITIES.

6. ANY PROPERTY DAMAGE CAUSED BY THE CONTRACTOR OR HIS OPERATIONS SHALL BE CORRECTED AND/OR RESTORED TO THE SATISFACTION OF THE PROPERTY OWNER(S) AND THE LESSEE'S CONSTRUCTION MANAGER AT NO ADDITIONAL COST TO THE OWNER.

7. CONTRACTOR SHALL MAINTAIN 20' HORIZONTAL CLEARANCE FROM CENTERLINE OF EXISTING POWER LINES OR AS REQUESTED BY THE POWER COMPANY.

8. NOTIFY THE LESSEE'S REPRESENTATIVES TWENTY-FOUR HOURS PRIOR TO CONSTRUCTION TO ALLOW THE LESSEE'S REPRESENTATIVES TO LOOK AT THE SITE PRIOR TO EXCAVATION.

9. THE CONTRACTOR SHALL INCLUDE ALL WORK REQUIRED TO CO-LOCATE ON THE EXISTING TOWER INCLUDING ALL NECESSARY SITE IMPROVEMENTS, FOUNDATIONS, ELECTRICAL IMPROVEMENTS, SNAP INS, H-FRAME, AND OTHER ACCESSORIES FOR COMPLETE INSTALLATION.

10. THE CONTRACTOR IS RESPONSIBLE FOR THE INSTALLATION OF THE FOLLOWING EQUIPMENT: ANTENNAS, COAX CABLES, ICE BRIDGE, WAVEGUIDE LADDER, AND EQUIPMENT CABINETS. THE EQUIPMENT CABINETS SHALL BE TRANSPORTED TO THE SITE BY THE CONTRACTOR.

11. ALL CONCRETE SHALL BE NORMAL WEIGHT AND SHALL CONFORM TO THE ACI 301 AND THE FOLLOWING:
    -MINIMUM COMPRESSION STRENGTH 3,000 PSI
    -AIR ENTRAPMENT RANGE 3% TO 6%
    -SLUMP GREATER THAN 3", BUT NOT TO EXCEED 6".

12. CONTRACTOR TO NOTIFY THE LESSEE'S TESTING REPRESENTATIVE FORTY-EIGHT HOURS BEFORE CONCRETE POURS.

13. CONTRACTOR TO PROVIDE RED LINE CONSTRUCTION DRAWINGS TO TOWER OWNER AND LESSEE AT COMPLETION OF JOB.

UTILITY NOTES

1. APPLY FOR THE UTILITY SERVICE (ELECTRIC) NO LATER THAN THE NEXT BUSINESS DAY FOLLOWING AWARD OF CONTRACT. COORDINATE WITH THE ELECTRIC UTILITY COMPANY FOR EXACT TRANSFORMER LOCATION, METERING REQUIREMENTS, AND SERVICE ROUTING. COORDINATE WITH THE TELEPHONE UTILITY COMPANY FOR EXACT TELEPHONE REQUIREMENTS AND ROUTING OF SERVICE.

2. ALL UTILITY RELATED WORK SHALL BE PERFORMED IN ACCORDANCE WITH APPLICABLE UTILITY REQUIREMENTS. FIELD VERIFY EXISTING UTILITY LOCATIONS PRIOR TO CONSTRUCTION.

3. THE CONTRACTOR SHALL CONTACT UTILITIES AND LOCATOR SERVICE A MINIMUM OF 72 HOURS PRIOR TO THE START OF CONSTRUCTION. (NC ONE-CALL 811 OR 1-800-632-4949).

4. CONTRACTOR SHALL PROVIDE TRENCHING AND CONDUITS AS SHOWN OR AS REQUIRED BY LOCAL UTILITY.

5. NO PENETRATIONS TO THE TOWER FOUNDATION OF ANY KIND.

LEGEND

EXISTING		NEW
X 100.5	SPOT ELEVATION	712.9
95	CONTOUR LINE	98
SD	STORM DRAIN	SD
	CATCH BASIN	
R\W	RIGHT OF WAY	
	IRON PIN SET (IPS) 5/8" REBAR	
	IRON PIN FOUND (IPF)	
	BENCHMARK	
	CONCRETE MON. FOUND	
	CONCRETE MON. SET	
℄	CENTERLINE	
OHT	OVERHEAD TELEPHONE	
UGT	UNDERGROUND TELEPHONE	
OHP	OVERHEAD POWER	
UGP	UNDERGROUND POWER	
	UTILITY POLE	
	LIGHT POLE	
W	WATER LINE	
	WATER VALVE	
UGG	GAS LINE	
G	GAS VALVE	
ST	SANITARY SEWER	
Ⓜ	MANHOLE	

NOTE: THIS IS A GENERAL LEGEND.
SOME ITEMS MAY NOT APPLY TO THIS SITE.

LESSEE

TeleCAD Wireless
1961 NORTHPOINT BLVD, SUITE 130
HIXSON, TN 37343
PH: 423-843-9500
FAX: 423-843-9509

THE INFORMATION CONTAINED IN THIS SET OF DOCUMENTS IS PROPRIETARY BY NATURE. ANY USE OR DISCLOSURE OTHER THAN THAT WHICH RELATES TO THE CLIENT IS STRICTLY PROHIBITED.

A&E PROJECT #:	20171560891
DRAWN BY:	JSJ
CHECKED BY:	DMB

REVISIONS

NO.	DATE	BY	DESCRIPTION
4	11/10/17	CAD	CONSTRUCTION ISSUE
3	10/30/17	CAD	PRELIMINARY REVIEW
2	10/23/17	CAD	PRELIMINARY REVIEW
1	09/22/17	CAD	PRELIMINARY REVIEW
0	08/11/17	JSJ	PRELIMINARY REVIEW

NORTH CAROLINA PROFESSIONAL SEAL NO. 032507 ENGINEER STEPHEN E. HUNT 11/10/17

PROJECT No.
20171560891

SITE NAME:
BIG ECHO

SITE NUMBER:
443109

SITE ADDRESS:
137 DAVES ROAD
MOORESBORO, NC 28114

DESIGN TYPE:
RAWLAND

SHEET TITLE:
GENERAL NOTES

DRAWING NO. GN1
REVISION: 0

11/10/2017 2:07:59 PM, coreyday

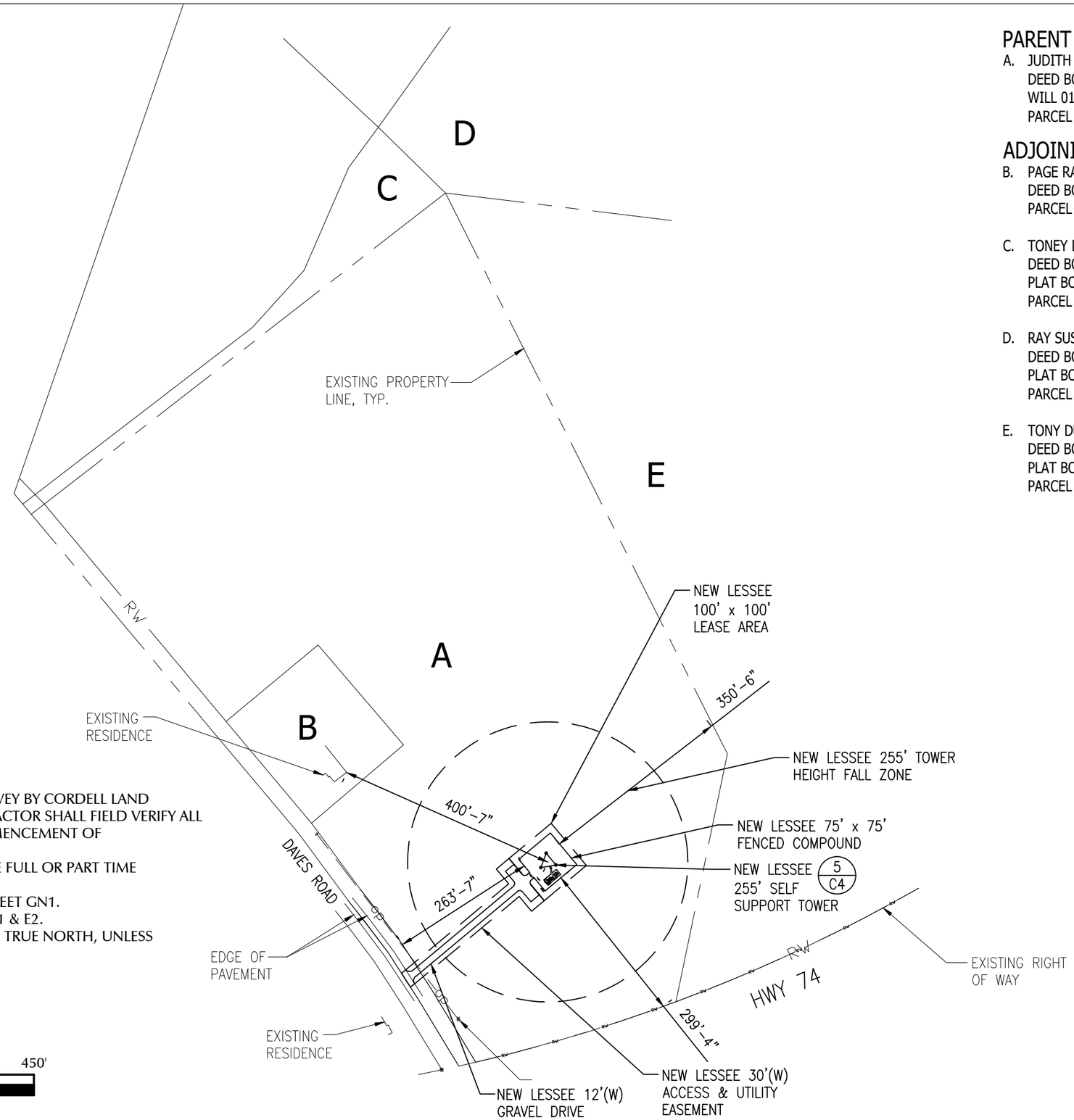

PARENT PARCEL

A. JUDITH D. YORK
DEED BOOK 1263, PAGE 2123
WILL 01 E 503
PARCEL 54749

ADJOINING PARCELS

B. PAGE RANDY DALE
DEED BOOK 1728, PAGE 2058
PARCEL 31719

C. TONEY DUSTIN C
DEED BOOK 1552, PAGE 1743
PLAT BOOK 34, PAGE 38
PARCEL 60570

D. RAY SUSAN HOLBERT
DEED BOOK 1494, PAGE 0979
PLAT BOOK 30, PAGE 3
PARCEL 59597

E. TONY DUSTIN C
DEED BOOK 1552, PAGE 1743
PLAT BOOK 34, PAGE 38
PARCEL 31693

NOTES:

1. THIS DRAWING IS BASED ON A SITE SURVEY BY CORDELL LAND SURVEYING, DATED 04-25-2017. CONTRACTOR SHALL FIELD VERIFY ALL EXISTING CONDITIONS PRIOR TO COMMENCEMENT OF CONSTRUCTION.
2. THE PROPOSED USE DOES NOT REQUIRE FULL OR PART TIME EMPLOYEES AT THE SITE.
3. FOR GENERAL SITE WORK NOTES, SEE SHEET GN1.
4. FOR ELECTRICAL SYMBOLS, SEE SHEETS E1 & E2.
5. ALL NORTH ARROWS ON SITE PLANS ARE TRUE NORTH, UNLESS OTHERWISE SPECIFIED.

REFERENCE NOTES:

5 - TOWER ELEVATION. SEE DETAIL SHEET C4.

0' 150' 300' 450'

SCALE: 1" = 150'

LESSEE

TeleCAD Wireless
1961 NORTHPOINT BLVD, SUITE 130
HIXSON, TN 37343
PH: 423-843-9500
FAX: 423-843-9509

THE INFORMATION CONTAINED IN THIS SET OF DOCUMENTS IS PROPRIETARY BY NATURE. ANY USE OR DISCLOSURE OTHER THAN THAT WHICH RELATES TO THE CLIENT IS STRICTLY PROHIBITED.

A&E PROJECT #:	20171560891
DRAWN BY:	JSJ
CHECKED BY:	DMB

REVISIONS

NO.	DATE	BY	DESCRIPTION
6	11/10/17	CAD	CONSTRUCTION ISSUE
5	10/30/17	CAD	PRELIMINARY REVIEW
4	10/23/17	CAD	PRELIMINARY REVIEW
3	09/22/17	CAD	PRELIMINARY REVIEW
2	08/11/17	JSJ	PRELIMINARY REVIEW

NORTH CAROLINA PROFESSIONAL SEAL NO. 032507 ENGINEER STEPHEN E. HUNT 11/10/17

PROJECT No.
20171560891

SITE NAME:
BIG ECHO

SITE NUMBER:
443109

SITE ADDRESS:
137 DAVES ROAD
MOORESBORO, NC 28114

DESIGN TYPE:
RAWLAND

SHEET TITLE:
OVERALL SITE LAYOUT PLAN

DRAWING NO. C1

REVISION: 0

11/10/2017 2:08:00 PM, coreyday

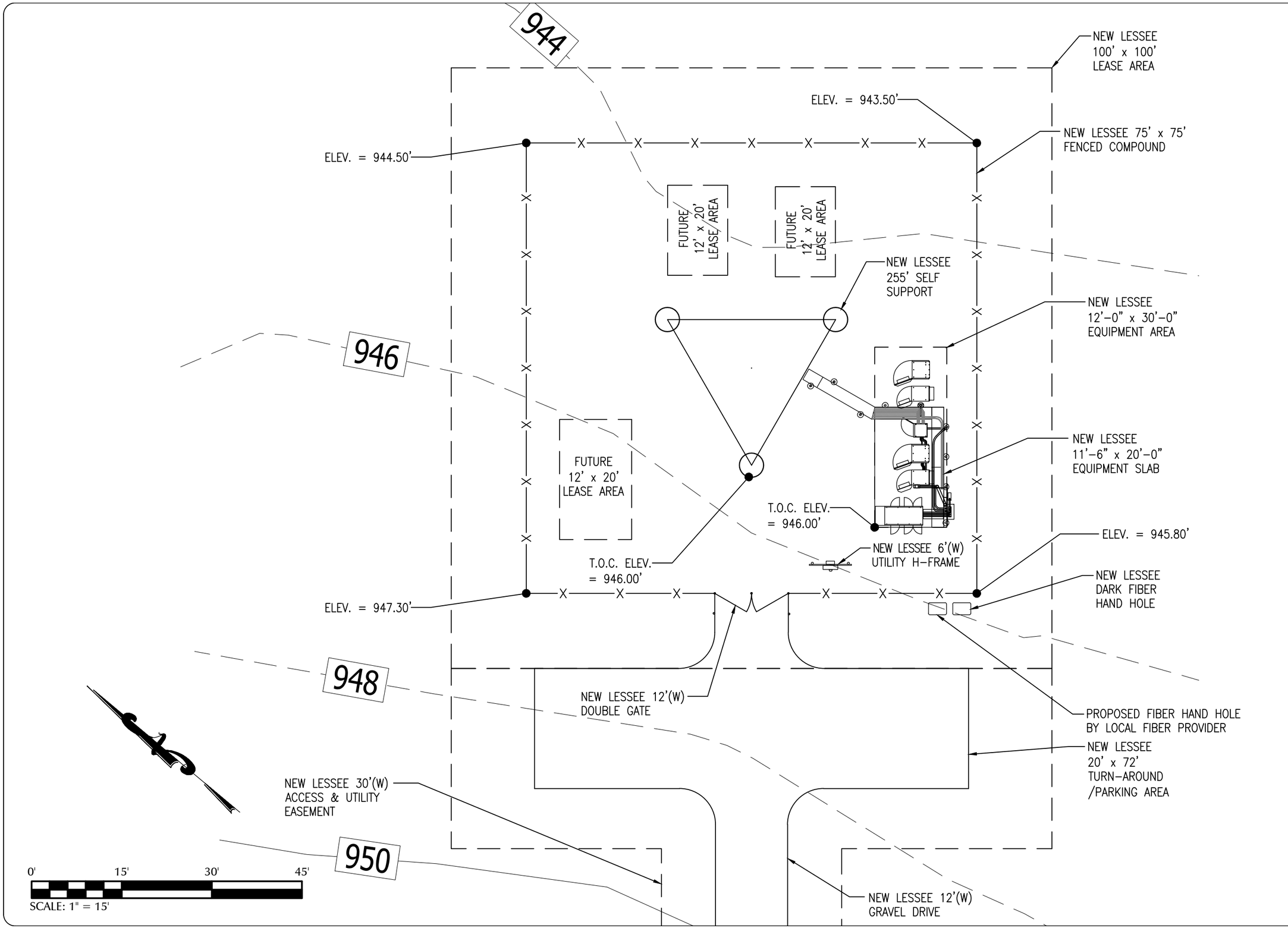

LESSEE

TeleCAD Wireless
1961 NORTHPOINT BLVD, SUITE 130
HIXSON, TN 37343
PH: 423-843-9500
FAX: 423-843-9509

THE INFORMATION CONTAINED IN THIS SET OF DOCUMENTS IS PROPRIETARY BY NATURE. ANY USE OR DISCLOSURE OTHER THAN THAT WHICH RELATES TO THE CLIENT IS STRICTLY PROHIBITED.

A&E PROJECT #:	20171560891
DRAWN BY:	JSJ
CHECKED BY:	DMB

REVISIONS

NO.	DATE	BY	DESCRIPTION
4	11/10/17	CAD	CONSTRUCTION ISSUE
3	10/30/17	CAD	PRELIMINARY REVIEW
2	10/23/17	CAD	PRELIMINARY REVIEW
1	09/22/17	CAD	PRELIMINARY REVIEW
0	08/11/17	JSJ	PRELIMINARY REVIEW

NORTH CAROLINA PROFESSIONAL SEAL NO. 032507 ENGINEER STEPHEN E. HUNT
11/10/17

PROJECT No.
20171560891

SITE NAME:
BIG ECHO

SITE NUMBER:
443109

SITE ADDRESS:
137 DAVES ROAD
MOORESBORO, NC 28114

DESIGN TYPE:
RAWLAND

SHEET TITLE:
SITE
GRADING PLAN

DRAWING NO.
C1A

REVISION:
0

11/10/2017 2:08:01 PM, coreyday

REFERENCE NOTES:

14 - COMPOUND SURFACING. SEE DETAIL SHEET C5.
17 - WOVEN WIRE FENCE. SEE DETAIL SHEET C6.
18 - WOVEN WIRE CORNER, GATE, END, OR POST. SEE DETAIL SHEET C6.
19 - WOVEN WIRE DOUBLE GATE. SEE DETAIL SHEET C6.
20 - MUSHROOM STOP. SEE DETAIL SHEET C6.
21 - GATE STOP. SEE DETAIL SHEET C6.
25 - GRAVEL ACCESS ROAD & PARKING / TURNAROUND AREA. SEE DETAIL SHEET C5.

BASIS OF DESIGN IS:
(1) RBA72
(1) RBA72-36
(1) RBS6120
GENERAL CONTRACTOR TO MODIFY SCOPE OF PROJECT BASED ON ACTUAL EQUIPMENT FURNISHED BY VZW

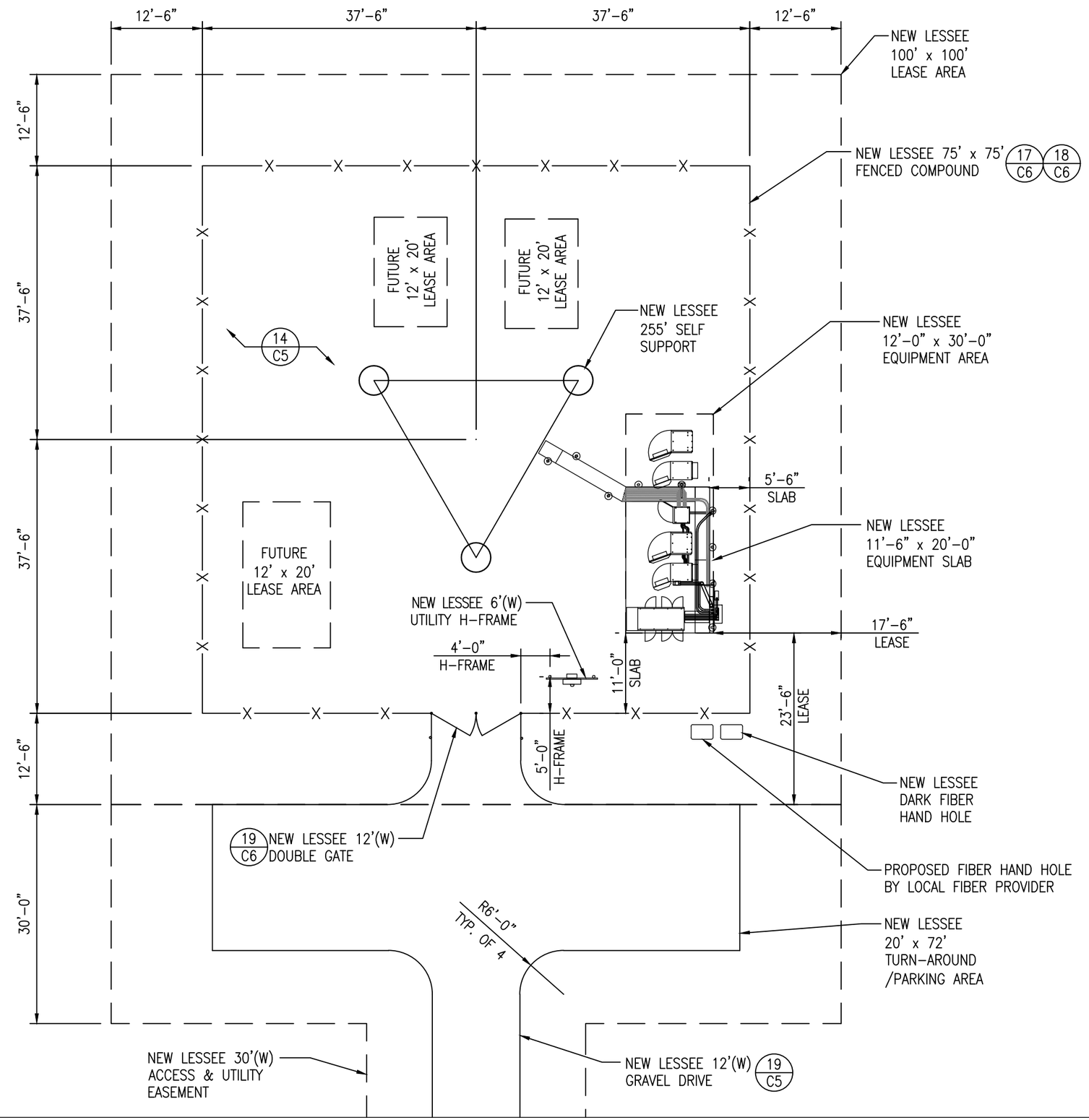

LESSEE

TeleCAD Wireless
1961 NORTHPOINT BLVD, SUITE 130
HIXSON, TN 37343
PH: 423-843-9500
FAX: 423-843-9509

THE INFORMATION CONTAINED IN THIS SET OF DOCUMENTS IS PROPRIETARY BY NATURE. ANY USE OR DISCLOSURE OTHER THAN THAT WHICH RELATES TO THE CLIENT IS STRICTLY PROHIBITED.

A&E PROJECT #:	20171560891
DRAWN BY:	JSJ
CHECKED BY:	DMB

REVISIONS

NO.	DATE	BY	DESCRIPTION
4	11/10/17	CAD	CONSTRUCTION ISSUE
3	10/30/17	CAD	PRELIMINARY REVIEW
2	10/23/17	CAD	PRELIMINARY REVIEW
1	09/22/17	CAD	PRELIMINARY REVIEW
0	08/11/17	JSJ	PRELIMINARY REVIEW

NORTH CAROLINA PROFESSIONAL SEAL NO. 032507 ENGINEER STEPHEN E. HUNT 11/10/17

PROJECT No.
20171560891

SITE NAME:
BIG ECHO

SITE NUMBER:
443109

SITE ADDRESS:
137 DAVES ROAD
MOORESBORO, NC 28114

DESIGN TYPE:
RAWLAND

SHEET TITLE:
SITE LAYOUT PLAN

DRAWING NO. C2
REVISION: 0

11/10/2017 2:08:02 PM, coreyday

REFERENCE NOTES:

12 - ICE BRIDGE AT SELF SUPPORT. SEE DETAIL SHEET C4.

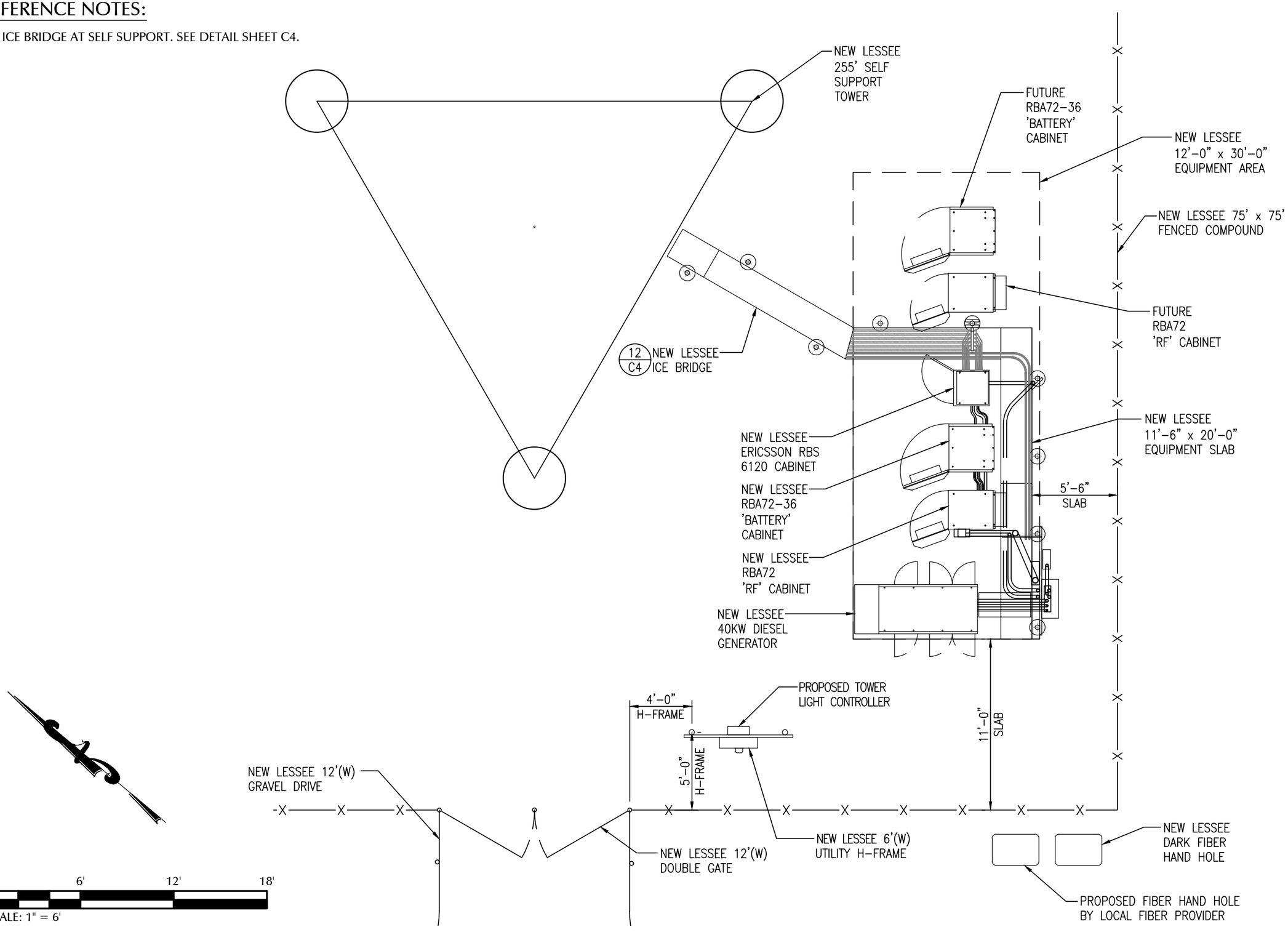

LESSEE

TeleCAD Wireless
1961 NORTHPOINT BLVD, SUITE 130
HIXSON, TN 37343
PH: 423-843-9500
FAX: 423-843-9509

THE INFORMATION CONTAINED IN THIS SET OF DOCUMENTS IS PROPRIETARY BY NATURE. ANY USE OR DISCLOSURE OTHER THAN THAT WHICH RELATES TO THE CLIENT IS STRICTLY PROHIBITED.

A&E PROJECT #:	20171560891
DRAWN BY:	JSJ
CHECKED BY:	DMB

REVISIONS

NO.	DATE	BY	DESCRIPTION
A	11/10/17	CAD	CONSTRUCTION ISSUE
A	10/30/17	CAD	PRELIMINARY REVIEW
A	10/23/17	CAD	PRELIMINARY REVIEW
A	09/22/17	CAD	PRELIMINARY REVIEW
A	08/11/17	JSJ	PRELIMINARY REVIEW

NORTH CAROLINA PROFESSIONAL SEAL NO. 032507 ENGINEER STEPHEN E. HUNT 11/10/17

PROJECT No.
20171560891

SITE NAME:
BIG ECHO

SITE NUMBER:
443109

SITE ADDRESS:
137 DAVES ROAD
MOORESBORO, NC 28114

DESIGN TYPE:
RAWLAND

SHEET TITLE:
ENLARGED LAYOUT PLAN

DRAWING NO. C2A

REVISION: 0

11/10/2017 2:08:03 PM, coreyday

ROUTING NOTES (01B & 01D LAYOUTS):

1. REFER TO THE SITE PLAN FOR EQUIPMENT PAD LOCATION AND ORIENTATION.
2. RUN 4" TELCO CONDUIT OVERHEAD ON WAVEGUIDE BRIDGE USING 16" RADIUS SWEEPS AT ALL BENDS. FASTEN TO UNDERSIDE OF ICE BRIDGE PER CONDUIT HANGER DETAIL. RUN DOWN CABLE LADDER TO APPROX. 3 FT HIGH, THEN SWEEP OVER TO 12X12X6 PVC NEMA BOX MOUNTED TO SIDE OF RBA72 CABINET WITH CHASE NIPPLE THROUGH FACTORY KNOCKOUT.
3. RUN 2" POWER CONDUIT OVERHEAD ON WAVEGUIDE BRIDGE. FASTEN TO UNDERSIDE OF ICE BRIDGE PER CONDUIT HANGER DETAIL. RUN DOWN CABLE LADDER TO APPROX. 5 FT HIGH, THEN SWEEP OVER TO 6X6X6 PVC NEMA BOX MOUNTED TO SIDE OF RBA72 CABINET WITH CHASE NIPPLE THROUGH FACTORY KNOCKOUT.
4. RUN 2" POWER CONDUIT OVERHEAD ON WAVEGUIDE BRIDGE. FASTEN TO UNDERSIDE OF ICE BRIDGE PER CONDUIT HANGER DETAIL. RUN DOWN CABLE LADDER TO APPROX. 6" HIGH, THEN ELBOW OVER TO BACK OF PLINTH BELOW RBS6120 CABINET. PENETRATE PLINTH USING FIELD DRILLED OPENING.
5. RUN HYBRID CABLE OVERHEAD ON TRAPEZE SUSPENDED FROM WAVE GUIDE BRIDGE. SWEEP DOWN ONTO CABLE LADDER TO APPROX. 18 INCH HEIGHT, THEN SWEEP OVER TO PENETRATION IN DOGHOUSE ON BACK OF RBA72 CABINET.
6. GPS ANTENNA TO BE MOUNTED TO EXTENDED ICE BRIDGE POST, OR TO STANDARD HEIGHT POST USING EXTENDED MOUNTING PIPE, USING COMMSCOPE GPS-U MOUNTING KIT. MOUNT AS NEAR AS IS PRACTICAL TO RBA72 CABINET.
7. FASTEN CONDUITS TO UNISTRUT ON WAVEGUIDE BRIDGE AND TO CABLE LADDER WITH TWO PIECE HOT DIP GALVANIZED CONDUIT STRAPS.
8. BOLT CABINETS AND GENERATOR TO SLAB USING FASTENERS SPECIFIED BY EQUIPMENT MANUFACTURER IN FACTORY PROVIDED MOUNTING HOLES.
9. SAWCUT CONTROL JOINT TO BE TREATED WITH SIKADUR 51 SL SEALANT OR APPROVED EQUAL.

REFERENCE NOTES:

6 - EQUIPMENT PAD FOUNDATION SECTION A. SEE DETAIL SHEET C3.
7 - EQUIPMENT PAD FOUNDATION SECTION B. SEE DETAIL SHEET C3A.

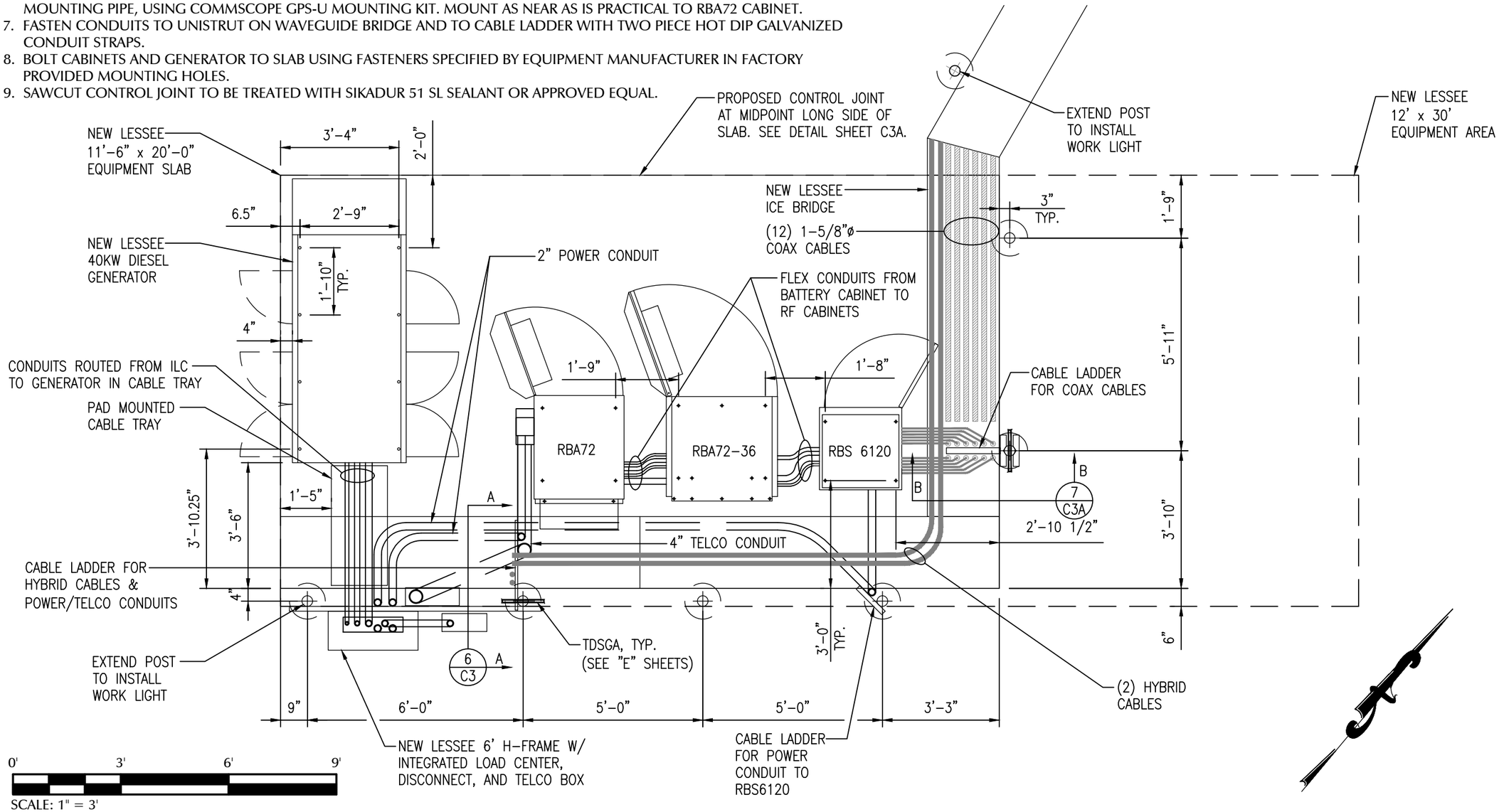

LESSEE

TeleCAD Wireless
1961 NORTHPOINT BLVD, SUITE 130
HIXSON, TN 37343
PH: 423-843-9500
FAX: 423-843-9509

THE INFORMATION CONTAINED IN THIS SET OF DOCUMENTS IS PROPRIETARY BY NATURE. ANY USE OR DISCLOSURE OTHER THAN THAT WHICH RELATES TO THE CLIENT IS STRICTLY PROHIBITED.

A&E PROJECT #:	20171560891
DRAWN BY:	JSJ
CHECKED BY:	DMB

REVISIONS

NO.	DATE	BY	DESCRIPTION
7	11/10/17	CAD	CONSTRUCTION ISSUE
6	10/30/17	CAD	PRELIMINARY REVIEW
5	10/23/17	CAD	PRELIMINARY REVIEW
4	09/22/17	CAD	PRELIMINARY REVIEW
3	08/11/17	JSJ	PRELIMINARY REVIEW

NORTH CAROLINA PROFESSIONAL SEAL NO. 032507 ENGINEER STEPHEN E. HUNT 11/10/17

PROJECT No.
20171560891

SITE NAME:
BIG ECHO

SITE NUMBER:
443109

SITE ADDRESS:
137 DAVES ROAD
MOORESBORO, NC 28114

DESIGN TYPE:
RAWLAND

SHEET TITLE:
EQUIPMENT LAYOUT PLAN

DRAWING NO. C2B
REVISION: 0

11/10/2017 2:08:04 PM, coreyday

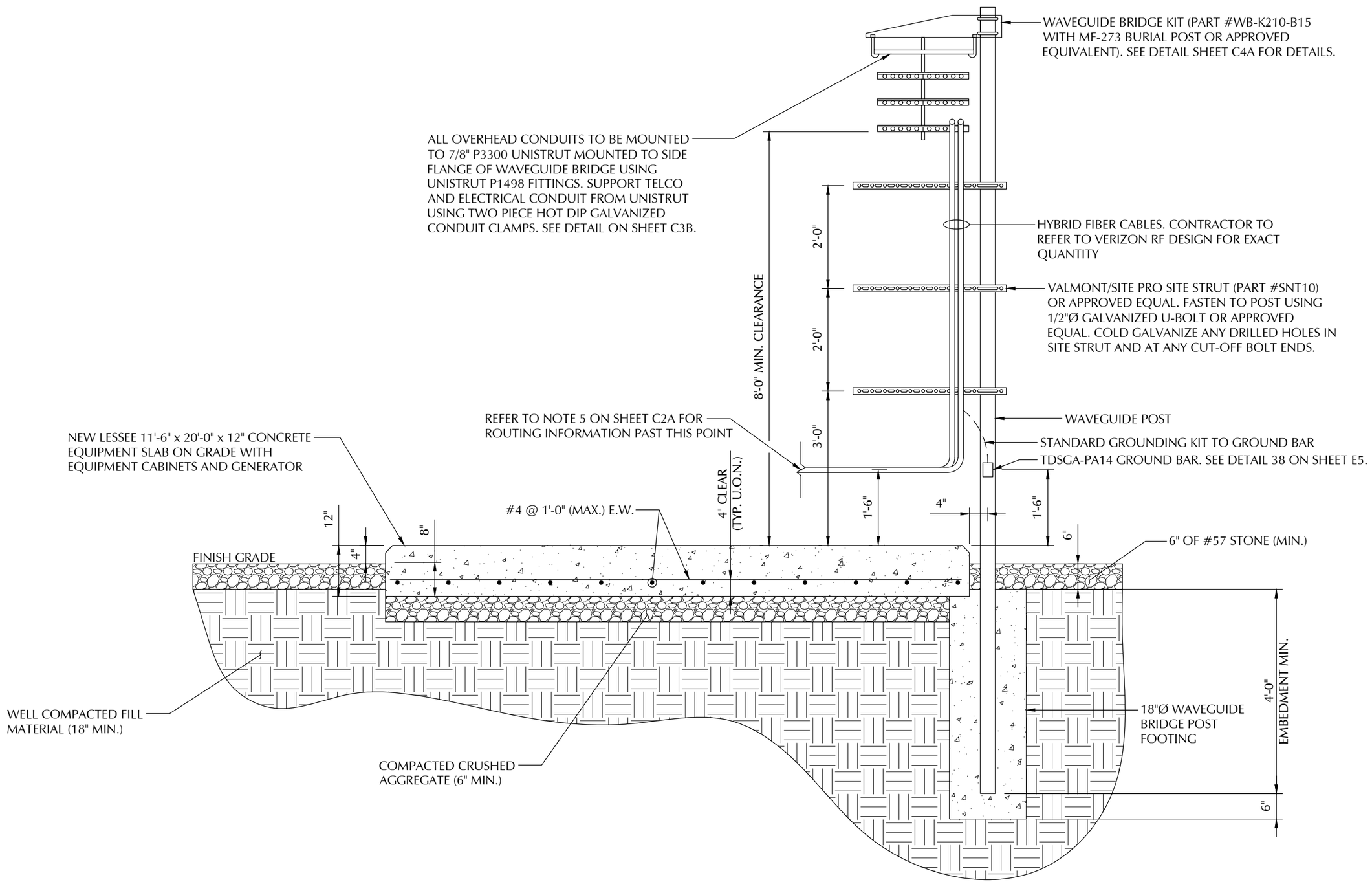

EQUIPMENT PAD FOUNDATION SECTION A

NTS

6 / C2B

LESSEE

TeleCAD Wireless
1961 NORTHPOINT BLVD, SUITE 130
HIXSON, TN 37343
PH: 423-843-9500
FAX: 423-843-9509

THE INFORMATION CONTAINED IN THIS SET OF DOCUMENTS IS PROPRIETARY BY NATURE. ANY USE OR DISCLOSURE OTHER THAN THAT WHICH RELATES TO THE CLIENT IS STRICTLY PROHIBITED.

A&E PROJECT #:	20171560891
DRAWN BY:	JSJ
CHECKED BY:	DMB

REVISIONS

NO.	DATE	BY	DESCRIPTION
4	11/10/17	CAD	CONSTRUCTION ISSUE
3	10/30/17	CAD	PRELIMINARY REVIEW
2	10/23/17	CAD	PRELIMINARY REVIEW
1	09/22/17	CAD	PRELIMINARY REVIEW
0	08/11/17	JSJ	PRELIMINARY REVIEW

NORTH CAROLINA PROFESSIONAL SEAL NO. 032507 ENGINEER STEPHEN E. HUNT 11/10/17

PROJECT No.
20171560891

SITE NAME:
BIG ECHO

SITE NUMBER:
443109

SITE ADDRESS:
137 DAVES ROAD
MOORESBORO, NC 28114

DESIGN TYPE:
RAWLAND

SHEET TITLE:
SITE DETAILS

DRAWING NO. C3 | REVISION: 0

11/10/2017 2:08:05 PM, coreyday

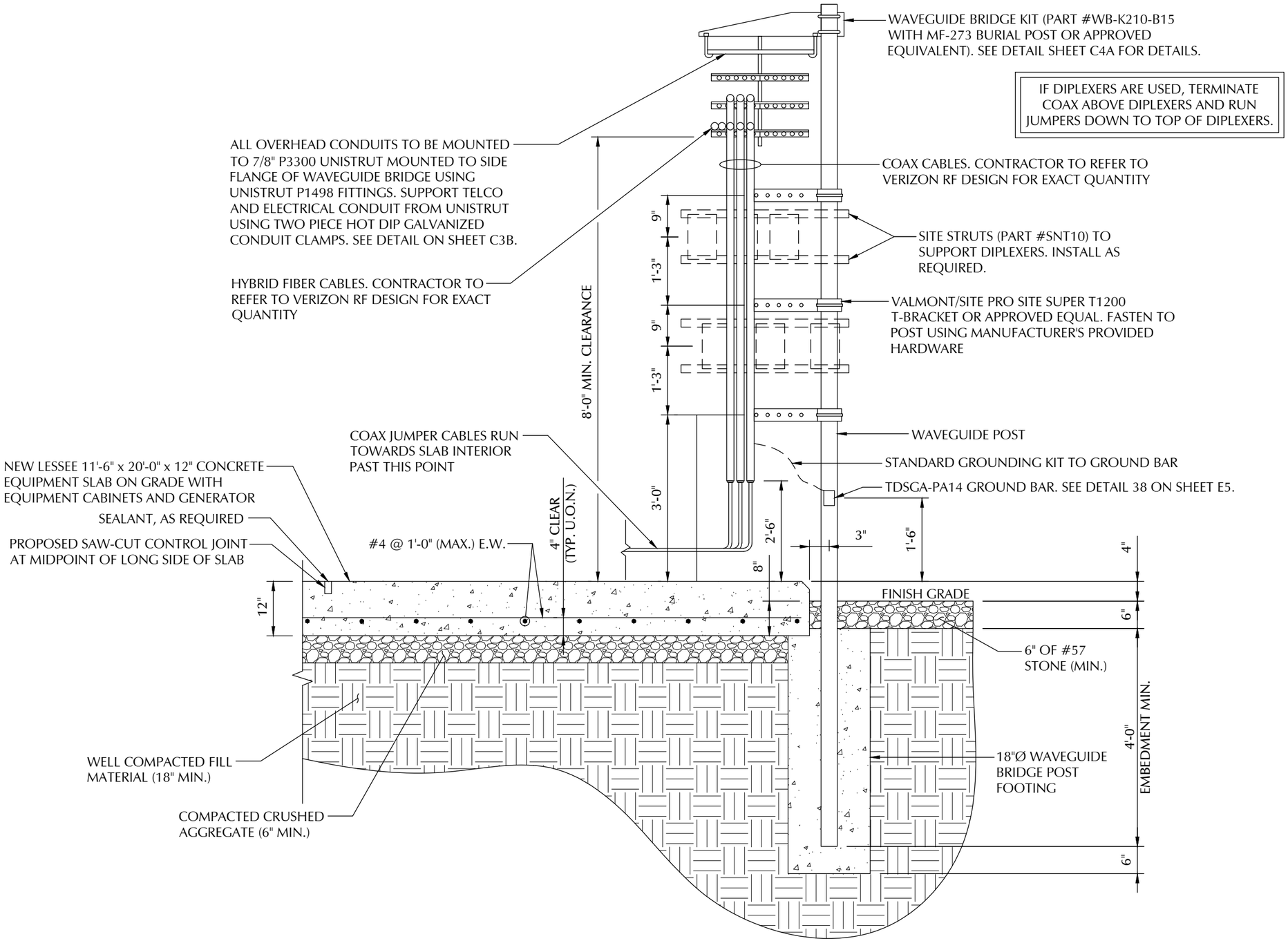

EQUIPMENT PAD FOUNDATION SECTION B

NTS

7 / C2B

LESSEE

TeleCAD Wireless
1961 NORTHPOINT BLVD, SUITE 130
HIXSON, TN 37343
PH: 423-843-9500
FAX: 423-843-9509

THE INFORMATION CONTAINED IN THIS SET OF DOCUMENTS IS PROPRIETARY BY NATURE. ANY USE OR DISCLOSURE OTHER THAN THAT WHICH RELATES TO THE CLIENT IS STRICTLY PROHIBITED.

A&E PROJECT #:	20171560891
DRAWN BY:	JSJ
CHECKED BY:	DMB

REVISIONS

NO.	DATE	BY	DESCRIPTION
4	11/10/17	CAD	CONSTRUCTION ISSUE
3	10/30/17	CAD	PRELIMINARY REVIEW
2	10/23/17	CAD	PRELIMINARY REVIEW
1	09/22/17	CAD	PRELIMINARY REVIEW
0	08/11/17	JSJ	PRELIMINARY REVIEW

NORTH CAROLINA PROFESSIONAL SEAL NO. 032507 ENGINEER STEPHEN E. HUNT 11/10/17

PROJECT No.
20171560891

SITE NAME:
BIG ECHO

SITE NUMBER:
443109

SITE ADDRESS:
137 DAVES ROAD
MOORESBORO, NC 28114

DESIGN TYPE:
RAWLAND

SHEET TITLE:
SITE DETAILS

DRAWING NO. C3A
REVISION: 0

11/10/2017 2:08:06 PM, coreyday

NOTE:

RUN CONDUITS DOWN FROM H-FRAME, ACROSS SLAB ON CABLE TRAY AND INTO CONDUIT AREA OF GENERATOR. CUT OPENING IN BOLT-ON PANEL AT END OF GENERATOR TO ALLOW PASSAGE OF CONDUITS, BUT MAINTAIN CAPABILITY TO REMOVE AND REPLACE PANEL, AND KEEP OUT INSECTS AND VERMIN. COORDINATE EXACT DETAILS OF OPENING WITH VZW CM.

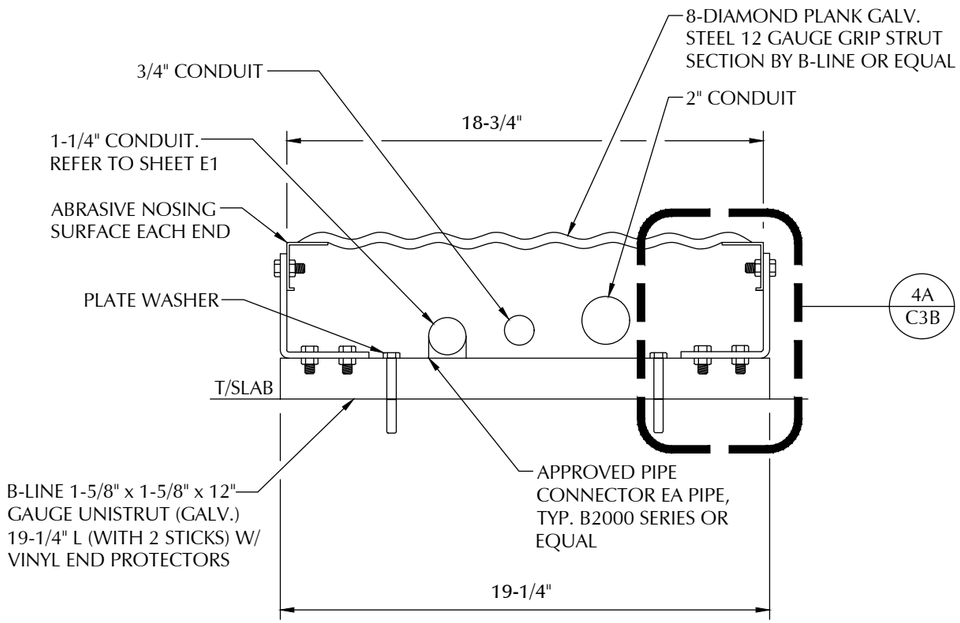

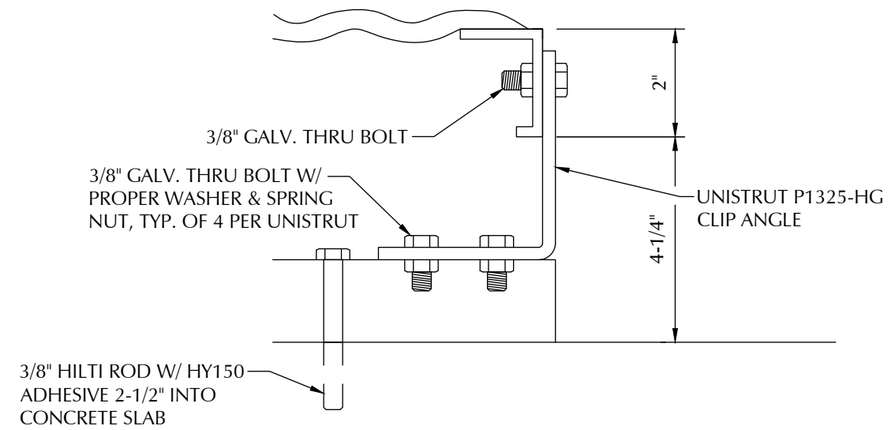

4A

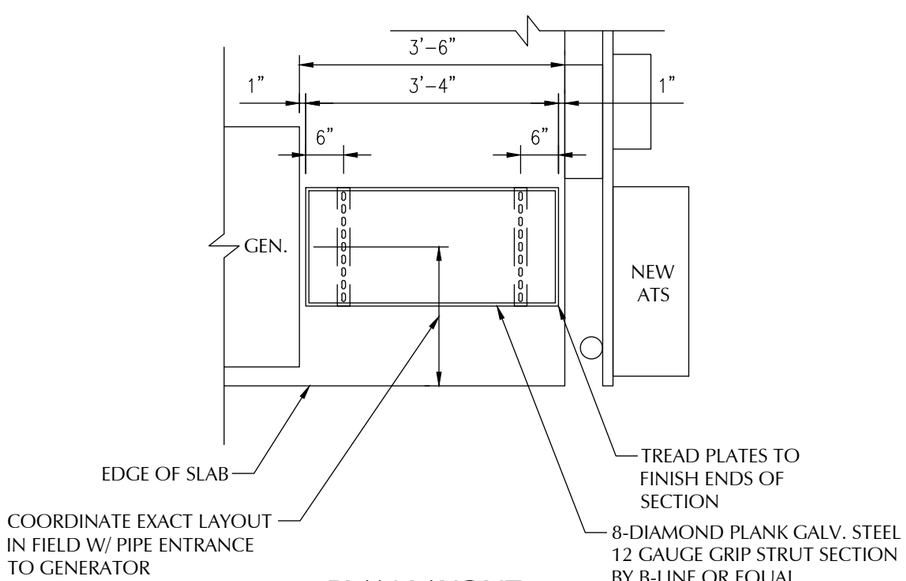

PLAN LAYOUT

NTS

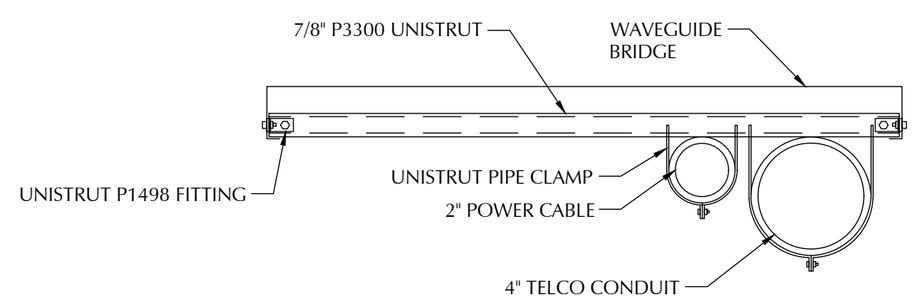

CONDUIT HANGER DETAIL

NTS

LESSEE

TeleCAD Wireless
1961 NORTHPOINT BLVD, SUITE 130
HIXSON, TN 37343
PH: 423-843-9500
FAX: 423-843-9509

THE INFORMATION CONTAINED IN THIS SET OF DOCUMENTS IS PROPRIETARY BY NATURE. ANY USE OR DISCLOSURE OTHER THAN THAT WHICH RELATES TO THE CLIENT IS STRICTLY PROHIBITED.

A&E PROJECT #:	20171560891
DRAWN BY:	JSJ
CHECKED BY:	DMB

REVISIONS

NO.	DATE	BY	DESCRIPTION
4	11/10/17	CAD	CONSTRUCTION ISSUE
3	10/30/17	CAD	PRELIMINARY REVIEW
2	10/23/17	CAD	PRELIMINARY REVIEW
1	09/22/17	CAD	PRELIMINARY REVIEW
0	08/11/17	JSJ	PRELIMINARY REVIEW

NORTH CAROLINA PROFESSIONAL SEAL NO. 032507 ENGINEER STEPHEN E. HUNT 11/10/17

PROJECT No.	20171560891
SITE NAME:	BIG ECHO
SITE NUMBER:	443109
SITE ADDRESS:	137 DAVES ROAD MOORESBORO, NC 28114
DESIGN TYPE:	RAWLAND
SHEET TITLE:	SITE DETAILS
DRAWING NO.	C3B
REVISION:	0

11/10/2017 2:08:07 PM, coreyday

ANTENNA LOADING SUMMARY										
ANTENNA POSITION	ANTENNA AZIMUTH	MECH. DT	ELEC. DT	LICENSED FREQUENCY	ANTENNA MODEL #	REMOTE RADIO UNIT	COMPOSITION CABLES			DIPLEXER MODEL #
							COAX QUANTITY	COAX SIZE	TOTAL HYBRID	
A1	0°	0°	4°	700 MHz	ANDREW LNX-6515DS-A1M	ERICSSON RRUS-B13	2	1-5/8"Ø	2	(2) COMMSCOPE CBC78-DF-2X
A2	0°	0°	2°	1900 MHz	ANDREW HBXX-6516DS-A2M	ERICSSON RRUS-32	-	-		
A3	0°	0°	2°	2100 MHz	ANDREW HBXX-6516DS-A2M	ERICSSON RRUS-32	-	-		
A4	0°	0°	4°	700 MHz	ANDREW LNX-6515DS-A1M	ERICSSON RRUS-B13	2	1-5/8"Ø		
B1	120°	0°	4°	700 MHz	ANDREW LNX-6515DS-A1M	ERICSSON RRUS-B13	2	1-5/8"Ø		(2) COMMSCOPE CBC78-DF-2X
B2	120°	0°	2°	1900 MHz	ANDREW HBXX-6516DS-A2M	ERICSSON RRUS-32	-	-		
B3	120°	0°	2°	2100 MHz	ANDREW HBXX-6516DS-A2M	ERICSSON RRUS-32	-	-		
B4	120°	0°	4°	700 MHz	ANDREW LNX-6515DS-A1M	ERICSSON RRUS-B13	2	1-5/8"Ø		
C1	240°	0°	4°	700 MHz	ANDREW LNX-6515DS-A1M	ERICSSON RRUS-B13	2	1-5/8"Ø		(2) COMMSCOPE CBC78-DF-2X
C2	240°	0°	2°	1900 MHz	ANDREW HBXX-6516DS-A2M	ERICSSON RRUS-32	-	-		
C3	240°	0°	2°	2100 MHz	ANDREW HBXX-6516DS-A2M	ERICSSON RRUS-32	-	-		
C4	240°	0°	4°	700 MHz	ANDREW LNX-6515DS-A1M	ERICSSON RRUS-B13	2	1-5/8"Ø		

NOTE: GC TO ADD RAYCAP (OVP) UNITS AND DIPLEXERS AS REQUIRED.

STRUCTURAL NOTES:

1. STRUCTURAL ANALYSIS PERFORMED BY OTHERS. CONTRACTOR TO COORDINATE WITH TOWER OWNER REPRESENTATIVE TO OBTAIN A COPY OF THE STRUCTURAL REPORT.
2. LINES AND ANTENNAS WORK SHALL NOT COMMENCE WITHOUT A PASSING STRUCTURAL REPORT IN HAND.

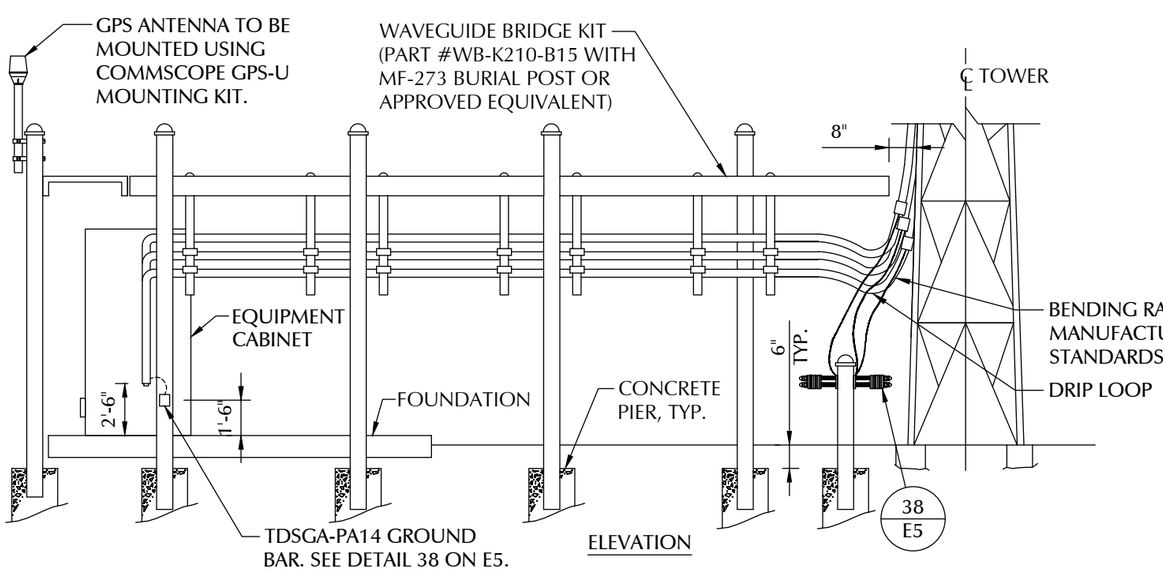

ELEVATION

ICE BRIDGE AT SELF SUPPORT (12 / C2)

NTS

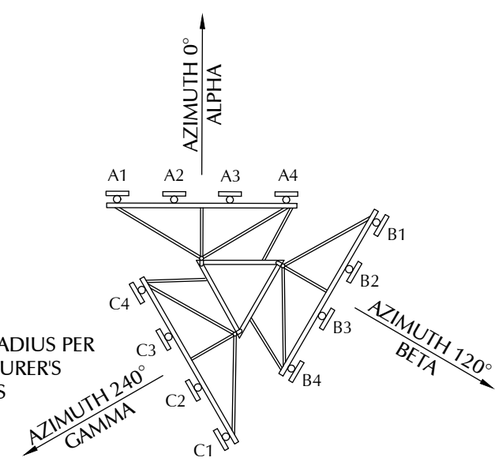

ANTENNA ORIENTATION PLAN (13 / --)

NTS

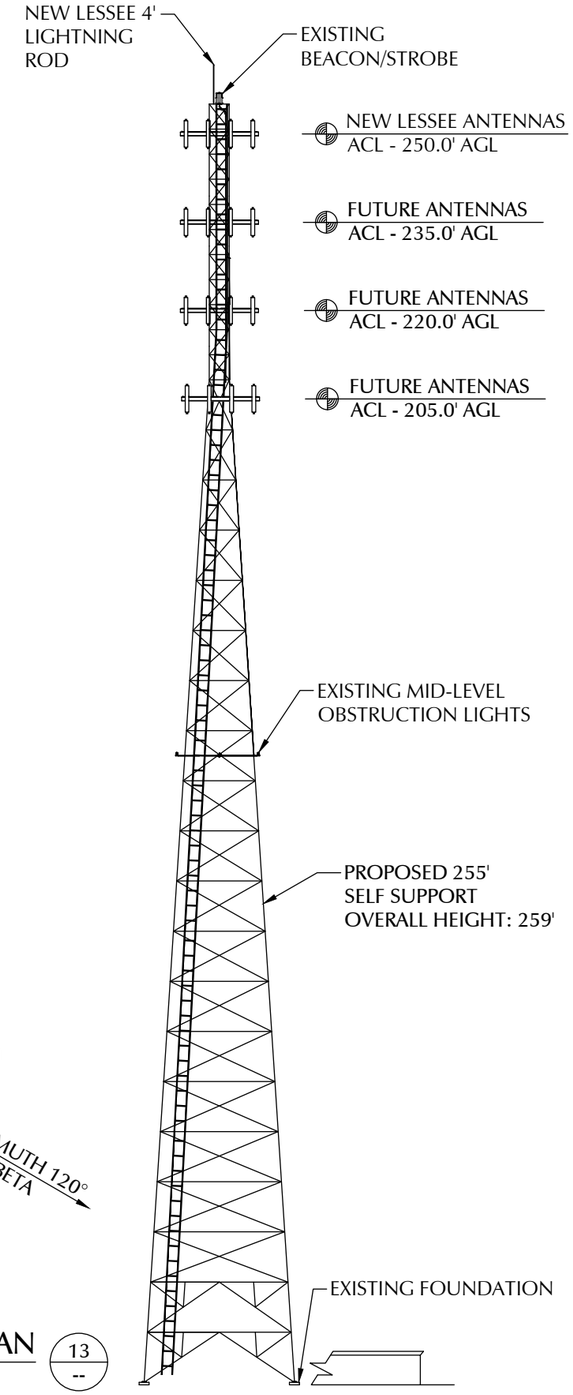

TOWER ELEVATION (5 / C1)

NTS

LESSEE

TeleCAD Wireless
1961 NORTHPOINT BLVD, SUITE 130
HIXSON, TN 37343
PH: 423-843-9500
FAX: 423-843-9509

THE INFORMATION CONTAINED IN THIS SET OF DOCUMENTS IS PROPRIETARY BY NATURE. ANY USE OR DISCLOSURE OTHER THAN THAT WHICH RELATES TO THE CLIENT IS STRICTLY PROHIBITED.

A&E PROJECT #:	20171560891
DRAWN BY:	JSJ
CHECKED BY:	DMB

REVISIONS

NO.	DATE	BY	DESCRIPTION
4	11/10/17	CAD	CONSTRUCTION ISSUE
3	10/30/17	CAD	PRELIMINARY REVIEW
2	10/23/17	CAD	PRELIMINARY REVIEW
1	09/22/17	CAD	PRELIMINARY REVIEW
0	08/11/17	JSJ	PRELIMINARY REVIEW

NORTH CAROLINA PROFESSIONAL SEAL NO. 032507 ENGINEER STEPHEN E. HUNT 11/10/17

PROJECT No.	20171560891
SITE NAME:	BIG ECHO
SITE NUMBER:	443109
SITE ADDRESS:	137 DAVES ROAD MOORESBORO, NC 28114
DESIGN TYPE:	RAWLAND
SHEET TITLE:	SITE DETAILS
DRAWING NO.	C4
REVISION:	0

11/10/2017 2:08:07 PM, coreyday

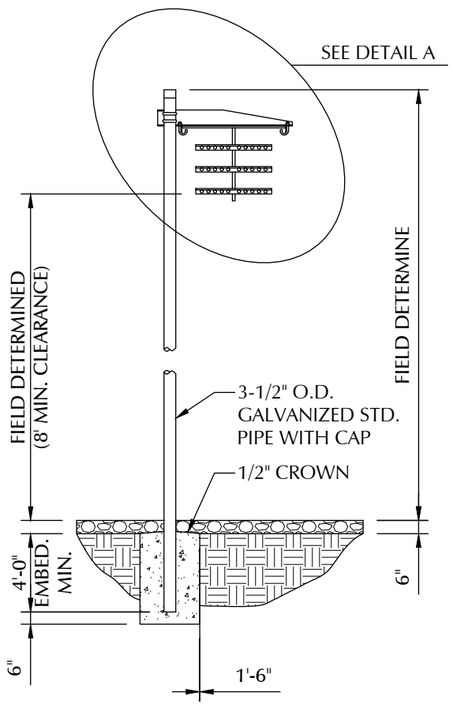

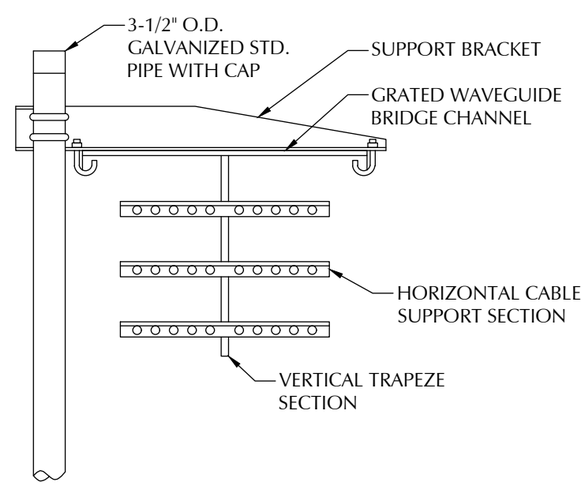

NOTE:
1. ALL MATERIALS FURNISHED BY CONTRACTOR UNLESS OTHERWISE NOTED

DETAIL A

ANDREW ONE POST WAVEGUIDE BRIDGE KIT
(PART #WB-K210-B15)

WAVEGUIDE BRIDGE DETAIL

NTS

8
--

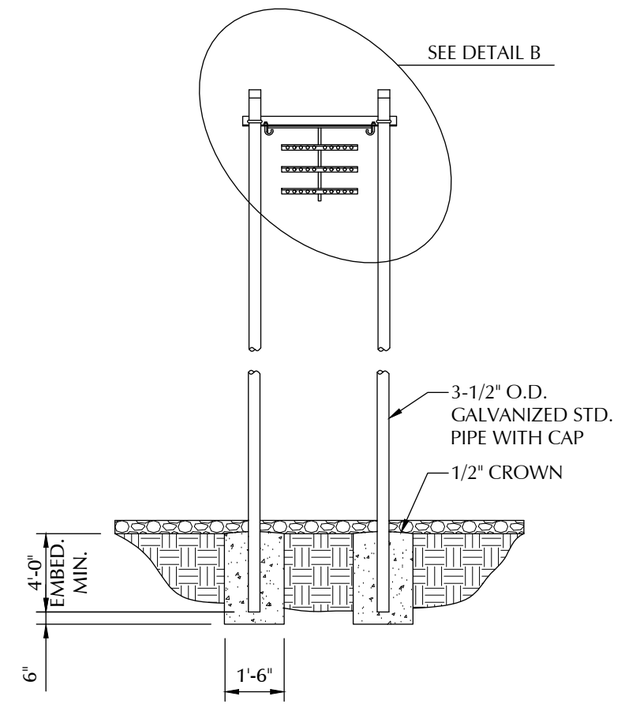

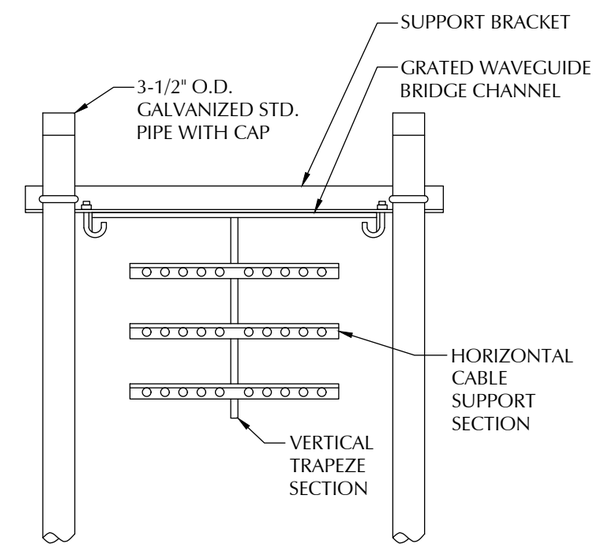

NOTE:
1. ALL MATERIALS FURNISHED BY CONTRACTOR UNLESS OTHERWISE NOTED

DETAIL B

ANDREW 2 POST WAVEGUIDE BRIDGE KIT
(PART #WB-K410-B15)

WAVEGUIDE BRIDGE DETAIL (ALTERNATE 2 POST DESIGN)

NTS

9
--

LESSEE

TeleCAD Wireless
1961 NORTHPOINT BLVD, SUITE 130
HIXSON, TN 37343
PH: 423-843-9500
FAX: 423-843-9509

THE INFORMATION CONTAINED IN THIS SET OF DOCUMENTS IS PROPRIETARY BY NATURE. ANY USE OR DISCLOSURE OTHER THAN THAT WHICH RELATES TO THE CLIENT IS STRICTLY PROHIBITED.

A&E PROJECT #:	20171560891
DRAWN BY:	JSJ
CHECKED BY:	DMB

REVISIONS

NO.	DATE	BY	DESCRIPTION
4	11/10/17	CAD	CONSTRUCTION ISSUE
3	10/30/17	CAD	PRELIMINARY REVIEW
2	10/23/17	CAD	PRELIMINARY REVIEW
1	09/22/17	CAD	PRELIMINARY REVIEW
0	08/11/17	JSJ	PRELIMINARY REVIEW

NORTH CAROLINA PROFESSIONAL SEAL NO. 032507 ENGINEER STEPHEN E. HUNT 11/10/17

PROJECT No.
20171560891

SITE NAME:
BIG ECHO

SITE NUMBER:
443109

SITE ADDRESS:
137 DAVES ROAD
MOORESBORO, NC 28114

DESIGN TYPE:
RAWLAND

SHEET TITLE:
SITE DETAILS

DRAWING NO.
C4A

REVISION:
0

11/10/2017 2:08:08 PM, coreyday

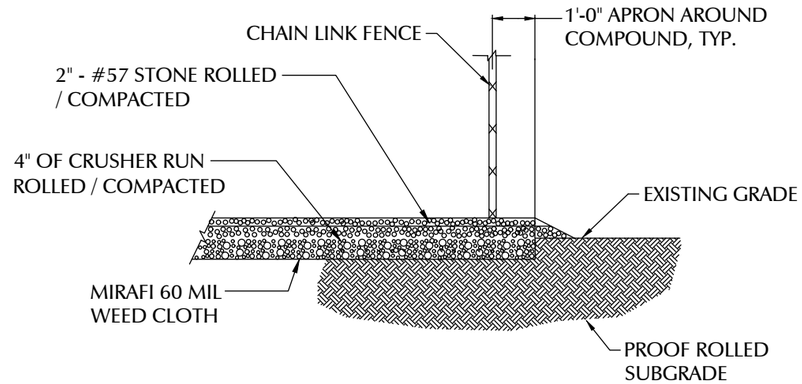

COMPOUND SURFACING

NTS

14 / C2

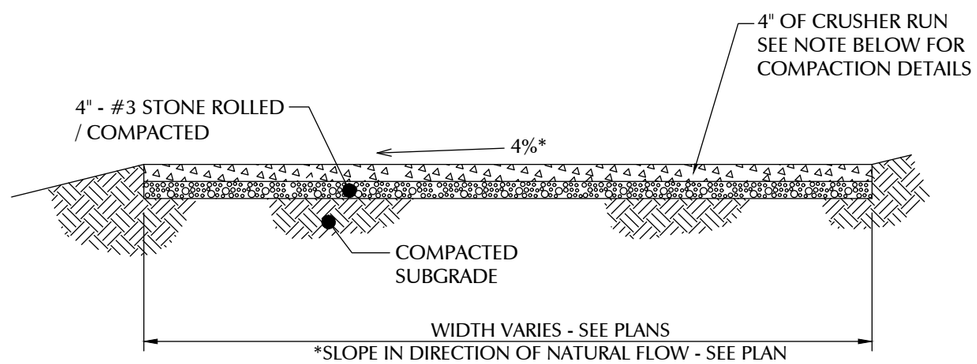

COMPACTION NOTE:
ALL AREAS TO RECEIVE FILL SHALL FIRST BE PROOF ROLLED UNDER THE SUPERVISION OF THE ENGINEER OR TESTING LAB PERSONNEL. ANY AREAS WHICH EXHIBIT "PUMPING" SHALL BE UNDERCUT (OR OTHERWISE STABILIZED) TO A FIRM SOIL BEFORE PLACING FILL. ALSO, ALL FINAL SUBBGRADES, WHETHER IN CUT OR FILL, SHALL BE PROOF ROLLED PRIOR TO CONSTRUCTING SLABS OR PAVEMENTS. CONTACT ENGINEER FOR DIRECTION IN SITUATIONS WHERE SOIL COMPACTION OR BEARING CAPACITY MAY BE INADEQUATE.

GRAVEL ACCESS ROAD & PARKING / TURNAROUND AREA

NTS

25 / C2

LESSEE

TeleCAD Wireless
1961 NORTHPOINT BLVD, SUITE 130
HIXSON, TN 37343
PH: 423-843-9500
FAX: 423-843-9509

THE INFORMATION CONTAINED IN THIS SET OF DOCUMENTS IS PROPRIETARY BY NATURE. ANY USE OR DISCLOSURE OTHER THAN THAT WHICH RELATES TO THE CLIENT IS STRICTLY PROHIBITED.

A&E PROJECT #:	20171560891
DRAWN BY:	JSJ
CHECKED BY:	DMB

REVISIONS

NO.	DATE	BY	DESCRIPTION
0	11/10/17	CAD	CONSTRUCTION ISSUE
1	10/30/17	CAD	PRELIMINARY REVIEW
2	10/23/17	CAD	PRELIMINARY REVIEW
3	09/22/17	CAD	PRELIMINARY REVIEW
4	08/11/17	JSJ	PRELIMINARY REVIEW

NORTH CAROLINA PROFESSIONAL SEAL NO. 032507 ENGINEER STEPHEN E. HUNT 11/10/17

PROJECT No.
20171560891

SITE NAME:
BIG ECHO

SITE NUMBER:
443109

SITE ADDRESS:
137 DAVES ROAD
MOORESBORO, NC 28114

DESIGN TYPE:
RAWLAND

SHEET TITLE:
SITE DETAILS

DRAWING NO. C5
REVISION: 0

11/10/2017 2:08:09 PM, coreyday

TYPICAL CHAIN LINK FENCING NOTES

(INSTALL FENCING PER ASTM F-567, SWING GATES PER ASTM F-900)

1. GATE POST, CORNER, TERMINAL OR PULL POST SHALL BE 3"Ø SCHEDULE 40 FOR GATE WIDTHS UP THRU 7 FEET OR 14 FEET FOR DOUBLE SWING GATE PER ASTM-F1083.
2. LINE POST: 2"Ø SCHEDULE 40 PIPE PER ASTM-F1083. INSTALL EVERY 10' ALONG FENCE LINE.
3. GATE FRAME: 1 1/2"Ø SCHEDULE 40 PIPE, STEEL , HOT-DIPPED ZINC COATED (GALVANIZED) WELDED STEEL PIPE PER ASTM-F1083 .
4. TOP RAIL & BRACE RAIL: 1 5/8"Ø SCHEDULE 40 PIPE PER ASTM-F1083.
5. CHAIN LINK FABRIC: 9 GA. MIN. CORE WIRE SIZE 2" MESH, CONFORMING TO ASTM-A392.
6. TIE WIRE: MINIMUM 11 GA GALVANIZED STEEL INSTALL A SINGLE WRAP TIE WIRE AT POSTS AND RAILS AT MAX. 24" INTERVALS. INSTALL HOG RINGS ON TENSION WIRE AT 24" INTERVALS.
7. TENSION WIRE: 7 GA. GALVANIZED STEEL .
8. BARBED WIRE: DOUBLE STRAND 12-1/2 GAUGE TWISTED WIRE, 4 PT. BARBS SPACED ON APPROXIMATELY 5" CENTERS. (IF USED)
9. GATE LATCH: 1-3/8" O.D. PLUNGER ROD W/ MUSHROOM TYPE CATCH.
10. LOCAL ORDINANCE FOR BARBED WIRE PERMIT SHALL GOVERN INSTALLATION.
11. HEIGHT = 8' VERTICAL + 1' BARBED WIRE VERTICAL DIMENSION. WORK WITH SPECIFICATION 2831.
12. EXTENSION ARMS TO BE PLACED ON ALL LINE POSTS NOT TO INCLUDE GATE POSTS AND CORNER POSTS.

CHECK LOCAL CODES FOR BARBED WIRE REQUIREMENTS.

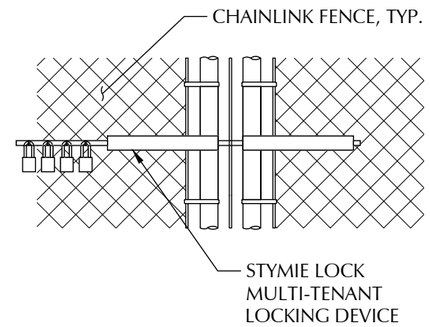

FENCE LOCK DETAIL

NTS

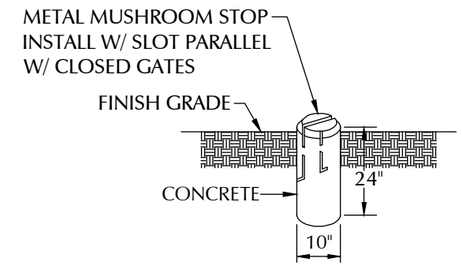

MUSHROOM STOP (20 / C2)

NTS

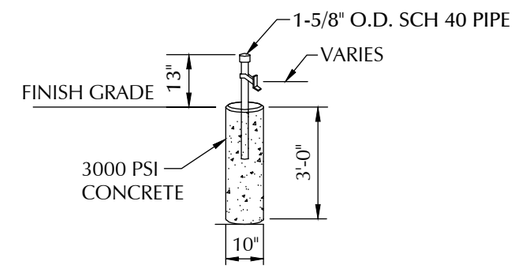

GATE STOP DETAIL (21 / C2)

NTS

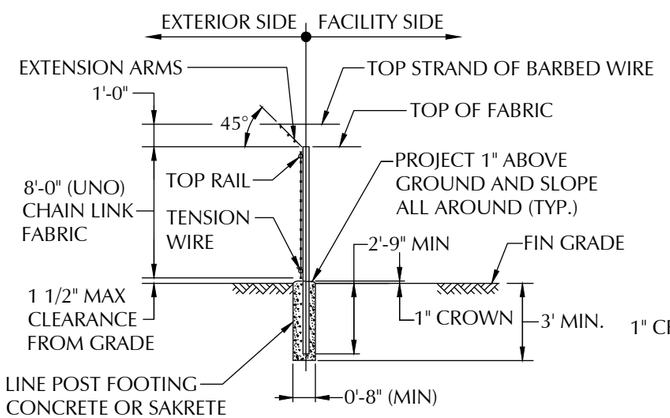

TYPICAL SECTION

CHAIN LINK FENCE (17 / C2)

NTS

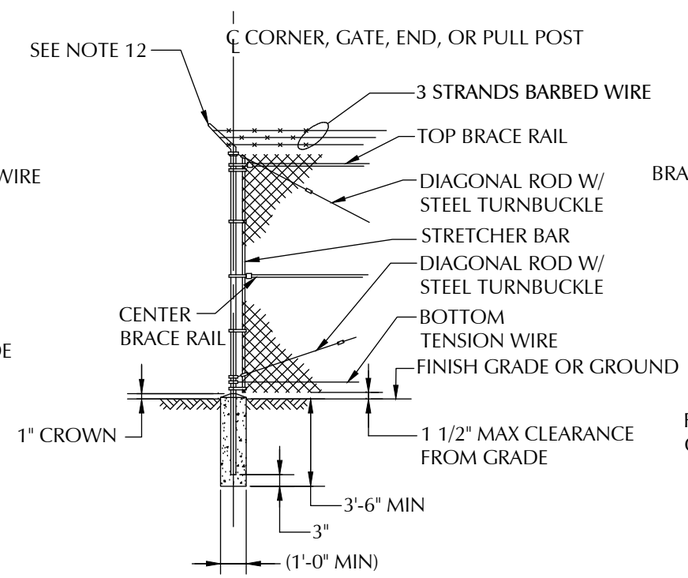

CHAIN LINK CORNER, GATE, END, OR PULL POST (18 / C2)

NTS

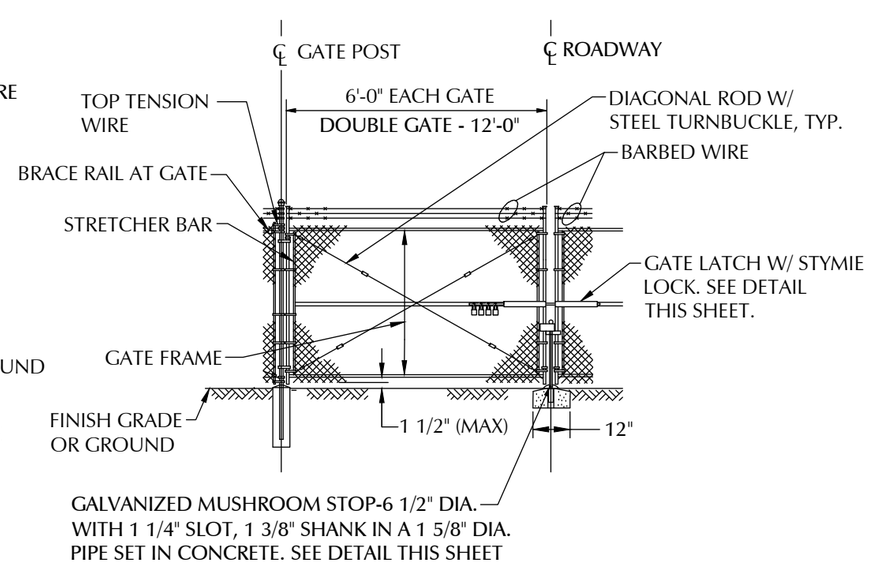

CHAIN LINK DOUBLE GATE (19 / C2)

NTS

LESSEE

TeleCAD Wireless
1961 NORTHPOINT BLVD, SUITE 130
HIXSON, TN 37343
PH: 423-843-9500
FAX: 423-843-9509

THE INFORMATION CONTAINED IN THIS SET OF DOCUMENTS IS PROPRIETARY BY NATURE. ANY USE OR DISCLOSURE OTHER THAN THAT WHICH RELATES TO THE CLIENT IS STRICTLY PROHIBITED.

A&E PROJECT #:	20171560891
DRAWN BY:	JSJ
CHECKED BY:	DMB

REVISIONS

NO.	DATE	BY	DESCRIPTION
6	11/10/17	CAD	CONSTRUCTION ISSUE
5	10/30/17	CAD	PRELIMINARY REVIEW
4	10/23/17	CAD	PRELIMINARY REVIEW
3	09/22/17	CAD	PRELIMINARY REVIEW
2	08/11/17	JSJ	PRELIMINARY REVIEW

NORTH CAROLINA PROFESSIONAL SEAL NO. 032507 ENGINEER STEPHEN E. HUNT 11/10/17

PROJECT No.: 20171560891

SITE NAME: BIG ECHO

SITE NUMBER: 443109

SITE ADDRESS: 137 DAVES ROAD MOORESBORO, NC 28114

DESIGN TYPE: RAWLAND

SHEET TITLE: FENCE DETAILS

DRAWING NO.: C6

REVISION: 0

11/10/2017 2:08:10 PM, coreyday

PLANTING SCHEDULE

QTY	BOTANICAL NAME	COMMON NAME	CALIPER	TYPE	SPACING	PLANTING HEIGHT	PLANTING WIDTH	MATURE HEIGHT	MATURE SPREAD	SUNLIGHT	SOIL CONDITIONS	SYMBOL	REMARKS
31	X Cupressocyparis leylandii	Leyland Cypress	N/A	UNDERSTORY EVERGREEN	10'	6 FT	N/A	25-50 FT	10 FT	FULL OR PARTIAL	ADAPTABLE		FULL TO BASE

LANDSCAPE NOTES:

1. ALL PLANT MATERIAL SHALL CONFORM TO THE STANDARDS SET FORTH THE CURRENT EDITION OF AMERICAN STANDARDS FOR NURSERY STOCK OF NURSERYMEN.
2. PLANTING PLAN TAKES PRECEDENCE OVER PLANT LIST.
3. ALL TREES SHALL BE STAKED OR GUYED AT TIME OF PLANTING UNLESS NO STAKES IS PRE-APPROVED BY OWNER. STAKES OR GUYS SHALL NOT RESTRICT MOVEMENT OF THE PLANT, BUT SHALL HAVE 2"-3" OF SLACK IN EACH GUY WIRE.
4. ALL PLANT MATERIAL IS SUBJECT TO THE OWNERS APPROVAL PRIOR TO INSTALLATION TO INSURE THE CONFORMITY TO THE SPECIFICATIONS.
5. APPLY GRANULAR PRE-EMERGENT HERBICIDE TO SOIL PER MANUFACTURERS RECOMMENDATIONS BELOW MULCH BED PRIOR TO MULCH APPLICATION.
6. APPLY "LESCO" (OR EQUAL) GRANULAR SLOW RELEASE FERTILIZER PER MANUFACTURERS RECOMMENDATIONS TO TREES AT TIME OF PLANTING.
7. PLACE 3"-4" MIN. THICKNESS OF SHREDDED BROWN HARDWOOD MULCH 10' WIDE AROUND FENCED AREA AS SHOWN ON PLAN. IF NECESSARY, INSTALL METAL OR PVC EDGING STRIPS TO PREVENT MULCH FROM WASHING ONTO ROAD OR OTHERWISE CAUSING PROBLEMS.
8. CONTRACTOR SHALL WARRANTY PLANTS FOR A PERIOD OF 1 YEAR AFTER FINAL ACCEPTANCE.

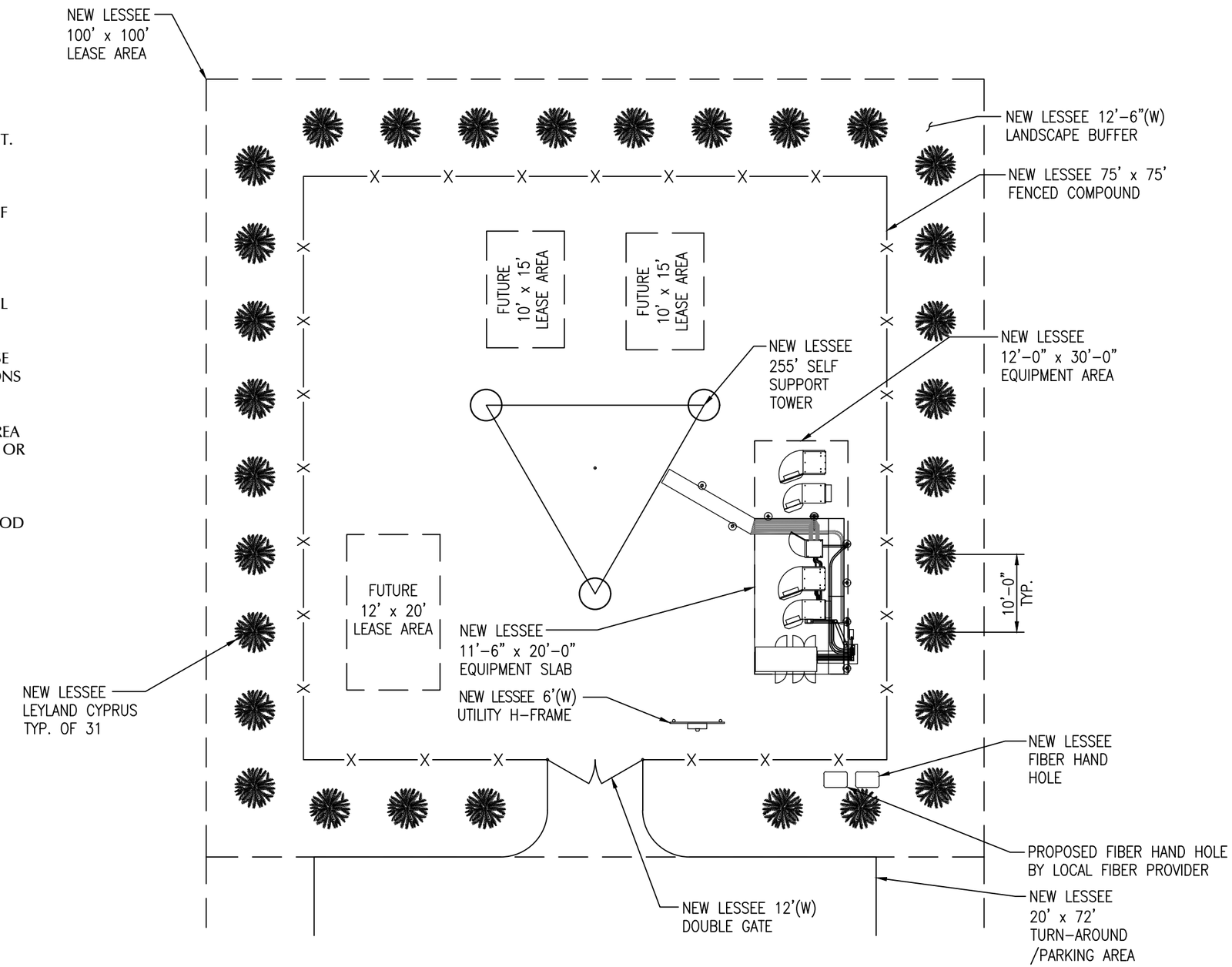

0' 15' 30' 45'

SCALE: 1" = 15'

LESSEE

TeleCAD Wireless
1961 NORTHPOINT BLVD, SUITE 130
HIXSON, TN 37343
PH: 423-843-9500
FAX: 423-843-9509

THE INFORMATION CONTAINED IN THIS SET OF DOCUMENTS IS PROPRIETARY BY NATURE. ANY USE OR DISCLOSURE OTHER THAN THAT WHICH RELATES TO THE CLIENT IS STRICTLY PROHIBITED.

A&E PROJECT #:	20171560891
DRAWN BY:	JSJ
CHECKED BY:	DMB

REVISIONS

NO.	DATE	BY	DESCRIPTION
6	11/10/17	CAD	CONSTRUCTION ISSUE
5	10/30/17	CAD	PRELIMINARY REVIEW
4	10/23/17	CAD	PRELIMINARY REVIEW
3	09/22/17	CAD	PRELIMINARY REVIEW
2	08/11/17	JSJ	PRELIMINARY REVIEW

NORTH CAROLINA PROFESSIONAL SEAL NO. 032507 ENGINEER STEPHEN E. HUNT 11/10/17

PROJECT No.	20171560891
SITE NAME:	BIG ECHO
SITE NUMBER:	443109
SITE ADDRESS:	137 DAVES ROAD MOORESBORO, NC 28114
DESIGN TYPE:	RAWLAND
SHEET TITLE:	LANDSCAPE PLAN
DRAWING NO.	L1
REVISION:	0

11/10/2017 2:08:11 PM, coreyday

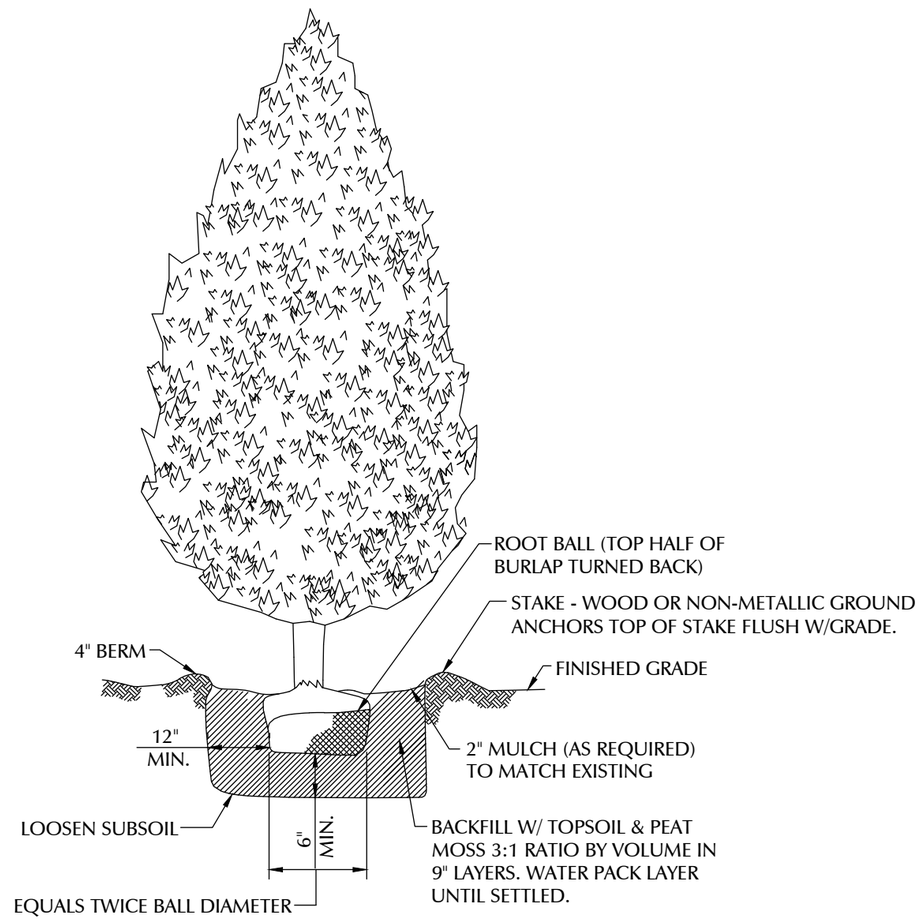

EVERGREEN TREE

NOTES:

1. EVERGREEN TREE SHALL BE MIN. 6'-0" IN HEIGHT AT TIME OF PLANTING.
2. EVERGREEN SHRUB SHALL BE A MIN. 5'-0" (H) x 5'-0" (W) AT TIME OF PLANTING

LESSEE

TeleCAD Wireless
1961 NORTHPOINT BLVD, SUITE 130
HIXSON, TN 37343
PH: 423-843-9500
FAX: 423-843-9509

THE INFORMATION CONTAINED IN THIS SET OF DOCUMENTS IS PROPRIETARY BY NATURE. ANY USE OR DISCLOSURE OTHER THAN THAT WHICH RELATES TO THE CLIENT IS STRICTLY PROHIBITED.

A&E PROJECT #:	20171560891
DRAWN BY:	JSJ
CHECKED BY:	DMB

REVISIONS

NO.	DATE	BY	DESCRIPTION
D	11/10/17	CAD	CONSTRUCTION ISSUE
C	10/30/17	CAD	PRELIMINARY REVIEW
B	10/23/17	CAD	PRELIMINARY REVIEW
A	09/22/17	CAD	PRELIMINARY REVIEW
0	08/11/17	JSJ	PRELIMINARY REVIEW

NORTH CAROLINA PROFESSIONAL SEAL NO. 032507 ENGINEER STEPHEN E. HUNT 11/10/17

PROJECT No.
20171560891

SITE NAME:
BIG ECHO

SITE NUMBER:
443109

SITE ADDRESS:
137 DAVES ROAD
MOORESBORO, NC 28114

DESIGN TYPE:
RAWLAND

SHEET TITLE:
LANDSCAPE DETAILS

DRAWING NO.	REVISION:
L2	0

11/10/2017 2:08:12 PM, coreyday

ELECTRICAL NOTES:

1. PROVIDE AND INSTALL WARNING TAPE FOR ELECTRIC SERVICE CONDUIT 12" BELOW GRADE. SEE CONDUIT SECTION ON SHEET E4.
2. CONTRACTOR TO PAY FOR THE SERVICE AS DIRECTED BY THE UTILITY COMPANY.
3. CONTRACTOR TO USE SCH. 80 CONDUIT WHERE CONDUITS CROSS ACCESS ROADS.
4. CONTRACTOR SHALL COORDINATE WITH ELECTRIC AND TELEPHONE UTILITY COMPANIES FOR SERVICES.
5. CONTRACTOR TO PAY ALL FEES FOR SERVICES REQUIRED.
6. CONTRACTOR TO BE ADVISED THAT EXISTING UNDERGROUND CONDUITS, GROUND CABLES EXIST. DIG WITH CAUTION.
7. CONTRACTOR TO VERIFY POWER AND TELCO LB LOCATIONS AND FLEX CONDUIT SIZE AND ROUTING TO THE EQUIPMENT CABINET WITH MANUFACTURER'S DRAWINGS.

UTILITY NOTES:

1. ALL POWER CONDUITS ABOVE GRADE, SWEEPS, & ELBOWS TO BE SCH. 40 PVC CONDUIT. ABOVE GROUND CONDUITS SHOULD USE SCH. 80 PVC WHERE EXPOSED AND SUBJECT TO DAMAGE FROM IMPACT.
2. ALL TELCO CONDUITS TO HAVE (3) 1.25" INNERDUCTS. EACH INNERDUCT TO HAVE A PULL STRING.
3. CONTRACTOR OR THEIR SUB-CONTRACTOR SHALL PROVIDE PULL BOXES FOR POWER AND TELCO CONDUIT RUNS AS REQUIRED BY LOCAL, STATE, OR NATIONAL ELECTRICAL CODE, CURRENT VERSION.
4. CONTRACTOR TO INSTALL & CONDUITS TO GENERATOR AS FOLLOWS: (1)-2" POWER CONDUIT TO MAIN BREAKER (MB2), (1)-3/4" POWER CONDUIT FOR BATTERY CHARGER & HEATER CIRCUIT, & (1)-1.25" POWER CONDUIT FOR START CIRCUIT & FOR GENERATOR ALARMS.

REFERENCE NOTES:

35 - GPS MOUNTING DETAIL. SEE DETAIL SHEET E4.
40 - TRENCH DETAIL. SEE DETAIL SHEET E4.
50 - METER CENTER DETAIL. SEE DETAIL SHEET E6A.
51 - POWER & TELCO SINGLE LINE DIAGRAM. SEE DETAIL SHEET E7.
52 - EQUIPMENT RACK DETAILS. SEE DETAIL SHEET E6B.

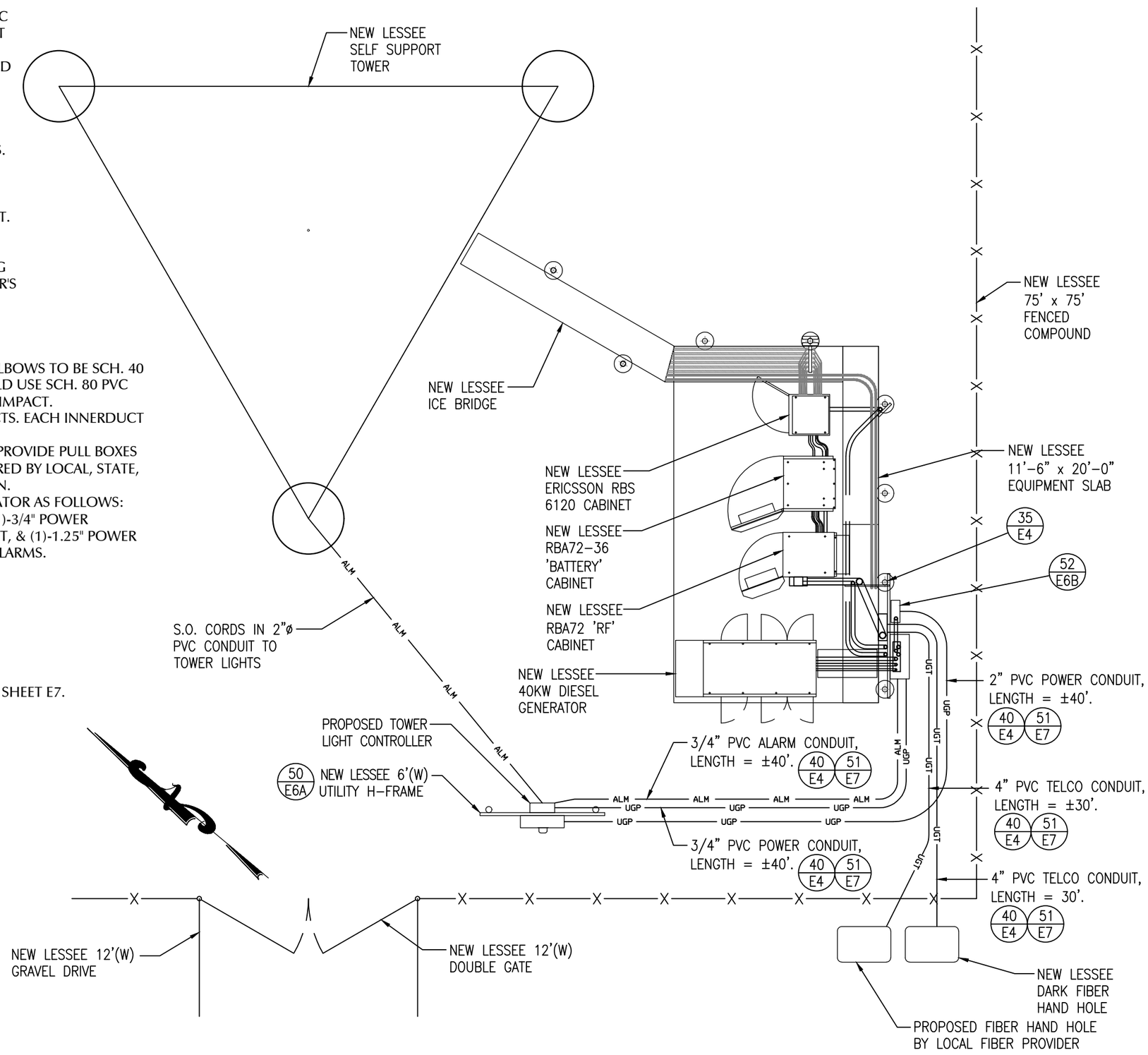

ELECTRICAL LEGEND:

TELEPHONE PEDESTAL	T
OVERHEAD TELEPHONE	OHT
UNDERGROUND TELEPHONE	UGT
OVERHEAD POWER	OHP
UNDERGROUND POWER	UGP

0' 6' 12' 18'
SCALE: 1" = 6'

LESSEE

TeleCAD Wireless
1961 NORTHPOINT BLVD, SUITE 130
HIXSON, TN 37343
PH: 423-843-9500
FAX: 423-843-9509

THE INFORMATION CONTAINED IN THIS SET OF DOCUMENTS IS PROPRIETARY BY NATURE. ANY USE OR DISCLOSURE OTHER THAN THAT WHICH RELATES TO THE CLIENT IS STRICTLY PROHIBITED.

A&E PROJECT #:	20171560891
DRAWN BY:	JSJ
CHECKED BY:	DMB

REVISIONS

NO.	DATE	BY	DESCRIPTION
4	11/10/17	CAD	CONSTRUCTION ISSUE
3	10/30/17	CAD	PRELIMINARY REVIEW
2	10/23/17	CAD	PRELIMINARY REVIEW
1	09/22/17	CAD	PRELIMINARY REVIEW
0	08/11/17	JSJ	PRELIMINARY REVIEW

NORTH CAROLINA PROFESSIONAL SEAL NO. 032507 ENGINEER STEPHEN E. HUNT 11/10/17

PROJECT No.	20171560891
SITE NAME:	BIG ECHO
SITE NUMBER:	443109
SITE ADDRESS:	137 DAVES ROAD MOORESBORO, NC 28114
DESIGN TYPE:	RAWLAND
SHEET TITLE:	ELECTRICAL SITE PLAN
DRAWING NO.	E1
REVISION:	0

11/10/2017 2:08:13 PM, coreyday

GROUNDING EQUIPMENT

- (A) GROUND ROD, TYP. (SEE DETAIL 49/E6 AND NOTES 2 & 3 ON E2B.)
- (B) GROUND RING (SEE NOTES 1, 3, & 4 ON E2B)
- (C) TDSGA-PA14 OR TDSGA-BC14 WHERE APPLICABLE (SEE NOTES 10A & 11 ON E2B)
- (D) FENCE POST GROUNDING, TYP. (SEE NOTE 24 ON E2B & DETAIL 42 ON E4)
- (E) REFER TO SHEETS E2B, E4, E5, E6, E8, & E9 FOR GROUNDING NOTES, DETAILS, & SPECIFICATIONS

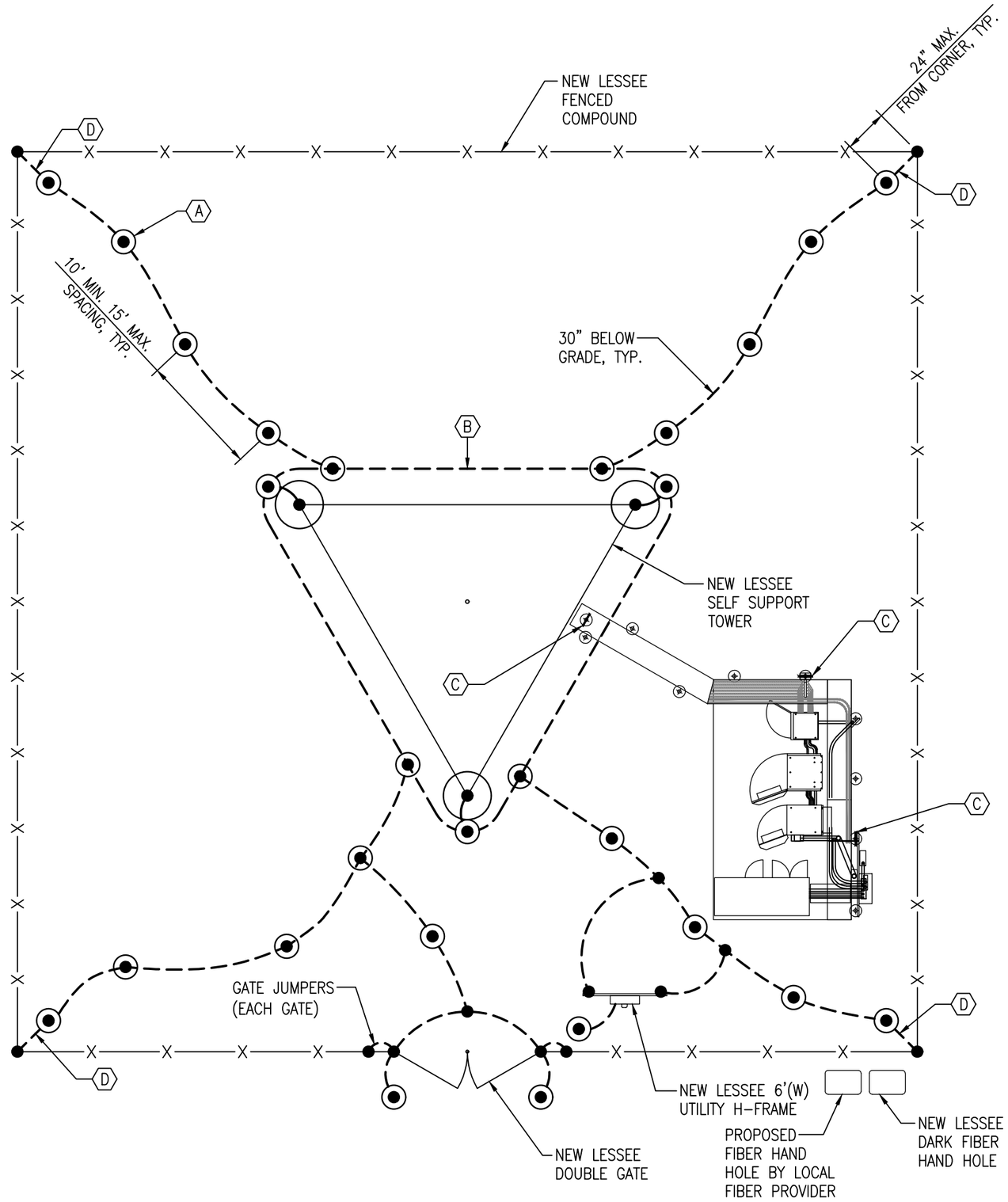

GROUNDING LEGEND:

- GROUND RING
- 5/8" x 10'-0" COPPER CLAD GROUND ROD
- GROUND ROD EXOTHERMICALLY WELDED TO GROUND RING
- EXOTHERMIC WELD
- GROUND ROD WITH INSPECTION SLEEVE
- MECHANICAL CONNECTION

LESSEE

TeleCAD Wireless
1961 NORTHPOINT BLVD, SUITE 130
HIXSON, TN 37343
PH: 423-843-9500
FAX: 423-843-9509

THE INFORMATION CONTAINED IN THIS SET OF DOCUMENTS IS PROPRIETARY BY NATURE. ANY USE OR DISCLOSURE OTHER THAN THAT WHICH RELATES TO THE CLIENT IS STRICTLY PROHIBITED.

A&E PROJECT #:	20171560891
DRAWN BY:	JSJ
CHECKED BY:	DMB

REVISIONS

NO.	DATE	BY	DESCRIPTION
0	11/10/17	CAD	CONSTRUCTION ISSUE
5	10/30/17	CAD	PRELIMINARY REVIEW
4	10/23/17	CAD	PRELIMINARY REVIEW
3	09/22/17	CAD	PRELIMINARY REVIEW
2	08/11/17	JSJ	PRELIMINARY REVIEW

NORTH CAROLINA PROFESSIONAL SEAL NO. 032507 ENGINEER STEPHEN E. HUNT 11/10/17

PROJECT No.	20171560891
SITE NAME:	BIG ECHO
SITE NUMBER:	443109
SITE ADDRESS:	137 DAVES ROAD MOORESBORO, NC 28114
DESIGN TYPE:	RAWLAND
SHEET TITLE:	SITE GROUNDING PLAN
DRAWING NO.	E2
REVISION:	0

11/10/2017 2:08:14 PM, coreyday

GROUNDING EQUIPMENT

- (A) GROUND ROD TEST WELL (SEE DETAIL 48/E6)
- (B) GROUND ROD, TYP. (SEE DETAIL 49/E6 AND NOTES 2 & 3 ON E2B.)
- (C) GROUND RING (SEE NOTES 1, 3, 4, & 5 ON E2B)
- (D) TDSGA–PA14 OR TDSGA–BC14 WHERE APPLICABLE (SEE NOTES 10A & 11 ON E2B)
- (E) GENERATOR GROUNDING (SEE NOTE 18 ON E2B)
- (F) PAD MOUNTED CABLE TRAY GROUNDING (SEE NOTE 14 ON E2B)
- (G) GPS ANTENNA GROUNDING (SEE NOTE 20 ON E2B)
- (H) RF (RBA72) CABINET GROUNDING (SEE NOTE 15 ON E2B)
- (J) RF (RBS6120) CABINET GROUNDING (SEE NOTE 16 ON E2B)
- (K) (RBA72–36) BATTERY CABINET GROUNDING (SEE NOTE 17 ON E2B)
- (L) ICE BRIDGE POST. BOND TO GROUND RING, TYP. (SEE NOTES 12 & 13 ON E2B)
- (M) FENCE POST GROUNDING, TYP. (SEE NOTE 24 ON E2B & DETAIL 42 ON E4)
- (N) REFER TO SHEETS E2B, E4, E5, E6, E8, & E9 FOR GROUNDING NOTES, DETAILS, & SPECIFICATIONS

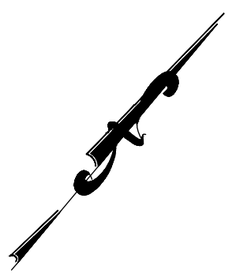

GROUNDING LEGEND:

- GROUND RING
- 5/8" x 10'-0" COPPER CLAD GROUND ROD
- GROUND ROD EXOTHERMICALLY WELDED TO GROUND RING
- EXOTHERMIC WELD
- GROUND ROD WITH INSPECTION SLEEVE
- MECHANICAL CONNECTION

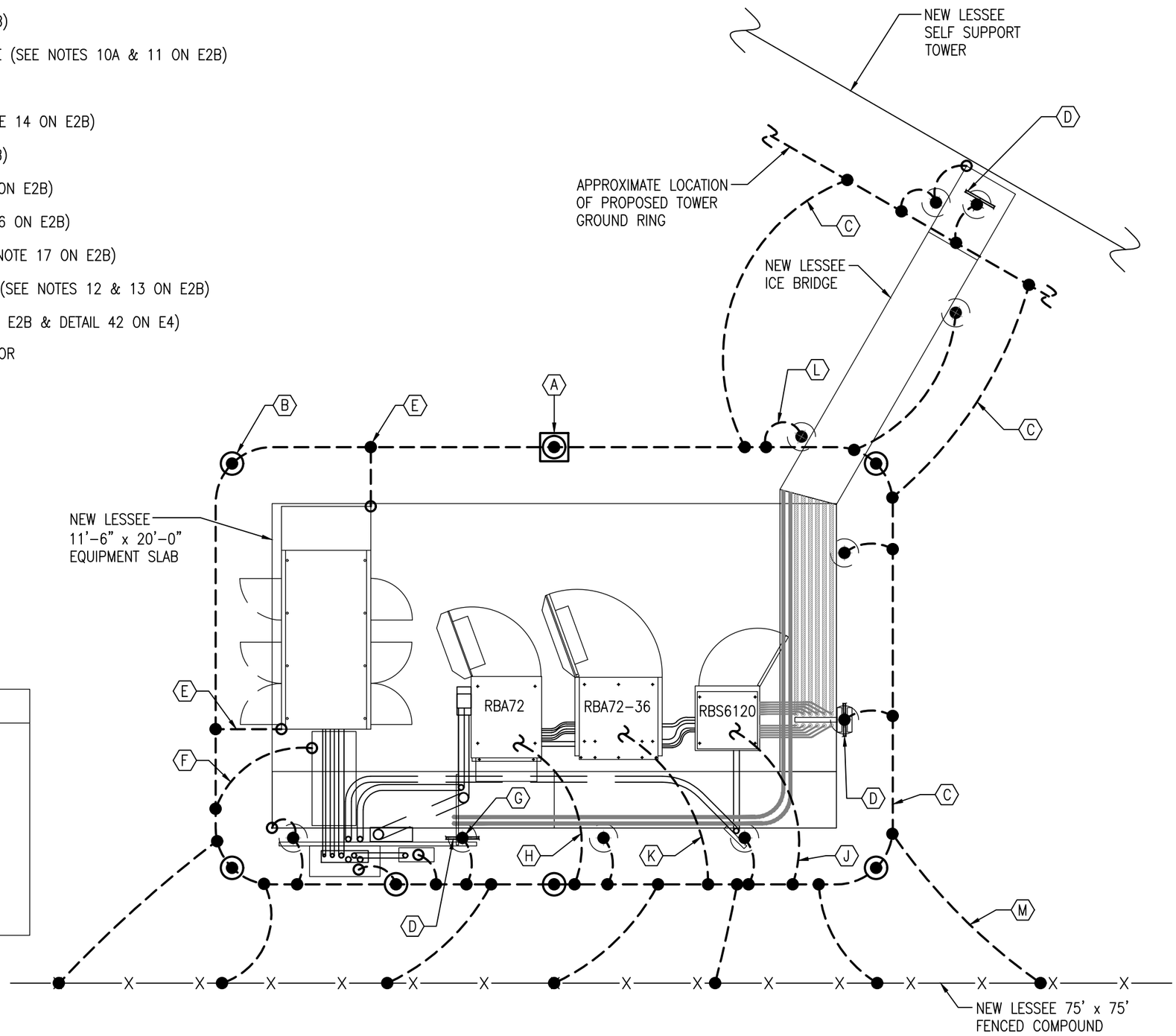

0' 4' 8' 12'

SCALE: 1" = 4'

LESSEE

TeleCAD Wireless
1961 NORTHPOINT BLVD, SUITE 130
HIXSON, TN 37343
PH: 423-843-9500
FAX: 423-843-9509

THE INFORMATION CONTAINED IN THIS SET OF DOCUMENTS IS PROPRIETARY BY NATURE. ANY USE OR DISCLOSURE OTHER THAN THAT WHICH RELATES TO THE CLIENT IS STRICTLY PROHIBITED.

A&E PROJECT #:	20171560891
DRAWN BY:	JSJ
CHECKED BY:	DMB

REVISIONS

NO.	DATE	BY	DESCRIPTION
6	11/10/17	CAD	CONSTRUCTION ISSUE
5	10/30/17	CAD	PRELIMINARY REVIEW
4	10/23/17	CAD	PRELIMINARY REVIEW
3	09/22/17	CAD	PRELIMINARY REVIEW
2	08/11/17	JSJ	PRELIMINARY REVIEW

NORTH CAROLINA PROFESSIONAL SEAL NO. 032507 ENGINEER STEPHEN E. HUNT 11/10/17

PROJECT No.	20171560891
SITE NAME:	BIG ECHO
SITE NUMBER:	443109
SITE ADDRESS:	137 DAVES ROAD MOORESBORO, NC 28114
DESIGN TYPE:	RAWLAND
SHEET TITLE:	EQUIPMENT GROUNDING PLAN
DRAWING NO.	E2A
REVISION:	0

11/10/2017 2:08:15 PM, coreyday

GROUNDING NOTES:

1. THE GROUND RING SHALL CONSIST OF #2 AWG BARE SOLID TINNED COPPER (STC) CONDUCTOR, UNLESS NOTED OTHERWISE, BURIED AT 30" BELOW FINISHED GRADE (OR BELOW FROST LINE). LOCATE 24" MINIMUM AND 36" MAXIMUM FROM EQUIPMENT PAD AND FROM TOWER FOUNDATION. ALL CONNECTIONS SHALL BE MADE USING A PARALLEL TYPE EXOTHERMIC WELD, UNLESS NOTED OTHERWISE.

2. INSTALL GROUND RODS AS SHOWN AND AS REQUIRED. GROUND RODS TO BE COPPER CLAD STEEL, 5/8" DIAMETER AND 10FT IN LENGTH. SPACING BETWEEN GROUND RODS SHALL BE 10FT MINIMUM AND 15FT MAXIMUM. TOP OF GROUND ROD TO BE 30" MINIMUM BELOW GRADE (OR BELOW FROST LINE). BOND TOP OF GROUND ROD TO GROUND WIRE WITH EXOTHERMIC WELD. DO NOT EXOTHERMICALLY WELD ANYTHING TO GROUND ROD EXCEPT GROUND WIRE WHICH PASSES OVER TOP OF GROUND ROD (CLAMPED CONNECTIONS TO GROUND ROD PER TOWER MANUFACTURERS DETAILS ARE ACCEPTABLE).

3. EQUIPMENT GROUND RING SHALL HAVE A MINIMUM OF 4 GROUND RODS, INSTALLED AT THE CORNERS OF THE GROUND RING PLUS ADDITIONAL RODS AS REQUIRED TO COMPLY WITH THE SPACING REQUIREMENTS. TOWER GROUND RING SHALL HAVE A MINIMUM OF 3 GROUND RODS, EXCEPT USE 4 RODS AT A MONOPOLE TOWER. WHERE SPREAD TOWER FOOTING WOULD PREVENT GROUND RODS FROM BEING DRIVEN INTO SOIL ADJACENT TO TOWER, PROVIDE VERTICAL 1" DIAMETER PVC SLEEVES EMBEDDED IN FOOTING TO ALLOW INSTALLATION OF GROUND RODS.

4. EQUIPMENT GROUND RING AND TOWER GROUND RING SHALL BE BONDED TOGETHER WITH TWO #2 STC GROUND LEADS, TYPICALLY ONE ON EACH SIDE OF ICE BRIDGE.

5. BOND TOWER TO TOWER GROUND RING AT THREE LOCATIONS WITH #2 STC GROUND LEAD. SELF SUPPORT TOWERS SHALL HAVE EACH LEG BONDED TO GROUND RING, MONOPOLES AND GUYED TOWERS SHALL HAVE GROUND LEADS EQUALLY SPACED AROUND TOWER. EXOTHERMICALLY WELD GROUND LEADS TO TOP OF BASE PLATES, OR ATTACH TO TOWER USING TOWER MANUFACTURER PROVIDED DETAIL.

6. PROVIDE #2 STC RADIALS FROM THE TOWER GROUND RING TO EACH FENCE CORNER POST. RADIALS SHALL HAVE GROUND RODS AS PER THE REQUIRED SPACING. THE GROUND ROD AT THE END OF EACH RADIAL SHALL BE 24" MAXIMUM FROM FENCE CORNER POST. EQUIPMENT PAD GROUND RING AND CONNECTING GROUND LEADS [BETWEEN EQUIPMENT PAD AND TOWER GROUND RINGS] MAY BE USED AS PART OF THE RADIAL GOING TO THE FENCE CORNER POST CLOSEST TO THE EQUIPMENT PAD.

7. MINIMUM BEND RADIUS FOR #2 AWG GROUND WIRE IS 12", EXCEPT USE 24" FOR TOWER GROUND RINGS AND EQUIPMENT PAD GROUND RINGS.

8. GROUND ALL EXTERIOR EXPOSED METAL OBJECTS. USE TWO HOLE LUGS FOR CONNECTION TO FLAT METAL SURFACES. USE ONLY STAINLESS STEEL HARDWARE ON ALL MECHANICAL CONNECTIONS. CLEAN ALL SURFACES (AND STRIP PAINTED SURFACES) TO BARE BRIGHT METAL PRIOR TO MAKING GROUND CONNECTIONS. APPLY ANTI-OXIDE COMPOUND TO ALL CONNECTIONS. APPLY ZINC RICH PAINT (COLD GALV.) TO ALL EXOTHERMIC WELDS, AND TO ANY METAL EXPOSED BY CLEANING, STRIPPING, GRINDING, CUTTING OR DRILLING.

9. ALL GROUNDING CONDUCTORS ABOVE GRADE SHALL BE RUN IN 3/4" FLEXIBLE PVC CONDUIT. CONDUIT SHALL BEGIN WITHIN 3/4" OF ABOVE GROUND CONNECTION POINT, SHALL EXTEND 24" BELOW GRADE MINIMUM, AND SHALL BE FILLED WITH SEALANT AT ABOVE GROUND CONNECTION POINT. SECURE CONDUIT EVERY 24" ON VERTICAL RUNS AND EVERY 36" ELSEWHERE WITH NON-METALLIC TIES.

10A. AT GUYED AND SELF SUPPORT TOWERS MOUNT TDSGA-PA14 TOWER BOTTOM GROUND BAR ON DEDICATED POST DIRECTLY BELOW COAX CABLES COMING OFF TOWER. POST TO BE 3.5" OD GALVANIZED SCHEDULE 40 PIPE WITH GALVANIZED PIPE CAP. TOP OF POST TO BE 78" ABOVE GRADE. EMBED POST 30" MINIMUM IN 12" DIAMETER BY 36" DEEP MINIMUM CONCRETE FOOTING WITH TOP OF FOOTING 6" BELOW GRADE. IF TOWER FOUNDATION OBSTRUCTS AUGERED FOOTING, USE POST WITH 10" SQUARE GALVANIZED STEEL FLANGE PLATE WELDED TO BOTTOM AND BOLT FLANGE TO TOP OF CONCRETE TOWER FOOTING.

10B. AT MONOPOLE TOWERS CLAMP TDSGA-BC14 TOWER BOTTOM GROUND BAR DIRECTLY TO TOWER. IF RUNNING COAX INSIDE MONOPOLE, CLAMP ONTO BOTTOM LIP OF EXIT PORT. IF BANDING COAX TO OUTSIDE OF TOWER, CLAMP ONTO STEEL ANGLE WHICH IS BANDED TO TOWER. BOND TDSGA-BC14 TO TOWER GROUND RING WITH TWO #2 STC LEADS LUGGED TO GROUND BAR AND EXOTHERMICALLY WELDED TO GROUND RING.

11. AT EQUIPMENT PAD, INSTALL TDSGA-PA14 EXTERIOR GROUND BAR (THRU-BOLTED STYLE) AT BASE OF ICE BRIDGE POST SUPPORTING COAX CABLE LADDER AND AT BASE OF ICE BRIDGE POST SUPPORTING HYBRID CABLE LADDER. MOUNT GROUND BAR TO POST AT 18" ABOVE TOP OF CONCRETE PAD, EXCEPT MOUNT GROUND BAR 6" ABOVE TOP OF PAD WHEN USED AS A GROUNDING POINT BY RACK MOUNTED RRU'S OR BY COAX/HYBRID CABLES COMING FROM UNDERGOUND CONDUITS.

12. ALL ICE BRIDGE SECTIONS ARE TO BE JUMPERED TOGETHER WITH #2 WIRE, EITHER BARE TINNED COPPER OR GREEN INSULATED STRANDED. ICE BRIDGE SHALL BE GROUNDED AT EACH END WITH #2 STC WIRE LUGGED TO ICE BRIDGE AND EXOTHERMICALLY WELDED TO UPPER PORTION OF NEAREST ICE BRIDGE POST.

13. BOND EACH ICE BRIDGE POST, H-FRAME POST OR DEDICATED GROUNDING POST TO BURIED GROUNDING SYSTEM WITH #2 STC LEAD EXOTHERMICALLY WELDED TO POST BELOW TOP OF GRAVEL AND EXOTHERMICALLY WELDED TO GROUND RING. EACH POST TO HAVE SEPARATE GROUND LEAD DIRECTLY TO GROUND RING - DO NOT DAISY CHAIN POSTS TOGETHER.

14. BOND SURFACE MOUNTED CABLE TRAY TO GROUND RING WITH #2 STC LEAD LUGGED TO SIDE OF GRIP STRUT CABLE TRAY COVER AND EXOTHERMICALLY WELDED TO GROUND RING.

15. BOND EACH COMMSCOPE RBA72 CABINET TO EQUIPMENT PLATFORM GROUND RING WITH #2 AWG TINNED SOLID BARE COPPER CONDUCTOR LUGGED TO CABINET BODY AND EXOTHERMICALLY WELDED TO GROUND RING. LUG TO CABINET BODY USING LOCATION AT WHICH STUDS ON CABINET CHASSIS HAVE DIRECT GROUND WIRE CONNECTION TO CABINET INTERNAL GROUND BAR. RUN CONDUIT AND CONDUCTOR ACROSS BACK OF CABINET (DO NOT RUN TOWARDS NEAREST CORNER OF CABINET AND THEN BEND GROUND WIRE SHARPLY), ACROSS CONCRETE PAD BELOW CABLE LADDER, THEN DOWN INTO GRAVEL AREA.

16. BOND EACH ERICSSON RBS6120 CABINET TO GROUND RING WITH #2 AWG TINNED SOLID BARE COPPER CONDUCTOR LUGGED TO CABINET GROUND BAR AND EXOTHERMICALLY WELDED TO GROUND RING. RUN GROUND LEAD IN FLEX CONDUIT ACROSS CONCRETE PAD BELOW CABLE LADDER, THEN DOWN INTO GRAVEL AREA. CONNECT FLEX CONDUIT TO CABINET AT PLINTH COVER PLATE WITH POSITIVE MECHANICAL FLEXIBLE CONDUIT FITTING.

17. BOND EACH COMMSCOPE RBA72-36 BATTERY CABINET TO GROUND RING WITH #2 AWG TINNED SOLID BARE COPPER CONDUCTOR LUGGED TO CABINET BODY AND EXOTHERMICALLY WELDED TO GROUND RING. RUN GROUND LEAD IN FLEX CONDUIT ALONG BACK OF RBA72 CABINET, ACROSS CONCRETE PAD BELOW CABLE LADDER, THEN DOWN INTO GRAVEL AREA. CONNECT TWO HOLE LUG TO BACK OF CABINET AT FACTORY PROVIDED GROUNDING STUDS.

18. BOND GENERATOR TO GROUND RING WITH #2 STC AT TWO DIAGONALLY OPPOSITE LOCATIONS BY DRILLING AND BOLTING TWO HOLE LUG TO FINS ON GENERATOR BASE STRUCTURE. GROUND LEADS SHOULD RUN ALONG BASE OF GENERATOR AND TAKE SHORTEST PATH ACROSS CONCRETE PAD TO GRAVEL AREA, THEN CONTINUE TO GROUND RING.

19. WHERE PROPANE TANK IS INSTALLED TO FUEL GENERATOR, BOND PROPANE TANK TO GROUND RING WITH A SINGLE #2 STC CLAMPED TO FILLER PIPE OF PROPANE TANK AND EXOTHERMICALLY WELDED TO GROUND RING. GROUND LEAD SHOULD RUN TO TANK SUPPORT AND TAKE SHORTEST PATH ACROSS CONCRETE PAD TO GRAVEL AREA, THEN CONTINUE TO GROUND RING. IF PROPANE TANK FUEL LINE IS METALLIC, BOND FUEL LINE TO EQUIPMENT GROUND RING WHERE THE TWO LINES CROSS WITH A SINGLE #2 STC CLAMPED TO FUEL LINE AND EXOTHERMICALLY WELDED TO GROUND RING.

20. BOND GPS ANTENNA AND GPS ANTENNA MOUNT TO TSDGA GROUND BAR AT BOTTOM OF ICE BRIDGE POST WITH #2 GREEN INSULATED STRANDED GROUND WIRE.

21. PROVIDE TWO GROUND RODS OUTSIDE GATES OF COMPOUND. DISTANCE BETWEEN GROUND RODS SHALL MATCH WIDTH OF GATE OPENING, AND DISTANCE FROM FENCE SHALL MATCH LENGTH OF LONGEST INDIVIDUAL GATE LEAF. BOND GATE POSTS TOGETHER WITH #2 STC LEAD WHICH RUNS PAST AND CONNECTS TO GROUND RODS OUTSIDE GATES.

22. BOND EACH GATE POST WITH #2 STC TO NEAREST PORTION OF GROUNDING SYSTEM INSIDE COMPOUND.

23. BOND EACH GATE TO GATE POST WITH FLEXIBLE INSULATED OR BRAIDED #4/0 COPPER STRAP. EXOTHERMICALLY WELD STRAP TO BOTH GATE AND GATE POST.

24. ANY METAL FENCE POST WITHIN 6FT OF A GROUNDED METAL OBJECT SHALL BE BONDED TO THE NEAREST GROUND RING. ANY METAL FENCE WITHIN 6FT OF A GROUND RING SHALL HAVE THE LINE POSTS BONDED TO THE GROUND RING AT 20FT MAXIMUM INTERVALS AS MEASURED ALONG THE LENGTH OF THE FENCE.

25. WHERE GROUND BASED RRU'S ARE INSTALLED ON H-FRAMES AT THE EQUIPMENT PAD, BOND EACH RRU TO TDSGA GROUND BAR AT BASE OF H-FRAME POST WITH #2 GREEN INSULATED STRANDED GROUND WIRE. SINGLE HOLE LUG OR RING TYPE CONNECTOR IS SUITABLE FOR CONNECTION TO GROUNDING STUD ON RRU.

26. NOTIFY VZW CM TO INSPECT GROUND RING BEFORE BACKFILLING. CONTRACTOR SHALL HIRE A 3RD PARTY TO PERFORM AN IEEE81 FALL OF POTENTIAL METHOD GROUND TEST. MAXIMUM ALLOWABLE RESISTANCE TO GROUND IS 5 OHMS. PROVIDE ADDITIONAL GROUND SYSTEM COMPONENTS AS REQUIRED TO ACHIEVE THIS VALUE.

27. REFER TO TOWER GROUNDING DIAGRAM AND NOTES FOR GROUND SYSTEM REQUIREMENTS ON THE TOWER.

28. GROUNDING OF ALL ELECTRICAL EQUIPMENT SHALL BE AS PER NEC, MUNICIPAL AND UTILITY COMPANY REQUIREMENTS.

LESSEE

TeleCAD Wireless
1961 NORTHPOINT BLVD, SUITE 130
HIXSON, TN 37343
PH: 423-843-9500
FAX: 423-843-9509

THE INFORMATION CONTAINED IN THIS SET OF DOCUMENTS IS PROPRIETARY BY NATURE. ANY USE OR DISCLOSURE OTHER THAN THAT WHICH RELATES TO THE CLIENT IS STRICTLY PROHIBITED.

A&E PROJECT #:	20171560891
DRAWN BY:	JSJ
CHECKED BY:	DMB

REVISIONS

NO.	DATE	BY	DESCRIPTION
3	11/10/17	CAD	CONSTRUCTION ISSUE
2	10/30/17	CAD	PRELIMINARY REVIEW
1	10/23/17	CAD	PRELIMINARY REVIEW
B	09/22/17	CAD	PRELIMINARY REVIEW
A	08/11/17	JSJ	PRELIMINARY REVIEW

NORTH CAROLINA PROFESSIONAL SEAL NO. 032507 ENGINEER STEPHEN E. HUNT 11/10/17

PROJECT No.
20171560891

SITE NAME:
BIG ECHO

SITE NUMBER:
443109

SITE ADDRESS:
137 DAVES ROAD
MOORESBORO, NC 28114

DESIGN TYPE:
RAWLAND

SHEET TITLE:
GROUNDING NOTES

DRAWING NO. E2B

REVISION: 0

11/10/2017 2:08:16 PM, coreyday

ELECTRICAL SPECIFICATIONS:

1. SCOPE: PROVIDE LABOR, MATERIALS, AND EQUIPMENT, ETC., REQUIRED TO COMPLETE THE INSTALLATION SHOWN ON THE DRAWINGS.

2. CODES AND STANDARDS: INSTALLATION SHALL COMPLY WITH APPLICABLE LAWS AND ORDINANCES, UTILITY COMPANY REGULATIONS, AND APPLICABLE REQUIREMENTS OF THE LATEST EDITIONS OF:

   A. NFC - NATIONAL FIRE CODES
   B. UL - UNDERWRITERS LABORATORIES
   C. NEC - NATIONAL ELECTRIC CODE
   D. NEMA - NATIONAL ELECTRICAL MANUFACTURES ASSOCIATION
   E. OSHA - OCCUPATIONAL SAFETY AND HEALTH ACT
   F. SBC - STANDARD BUILDING CODE

3. PERMITS: OBTAIN AND PAY FOR REQUIRED PERMITS, LICENSES, FEES, INSPECTIONS, ETC.

4. COORDINATION: COORDINATE WORK WITH OTHER TRADES.

5. SUBMITTALS: SUBMIT BROCHURES FOR APPROVAL ON MAJOR SYSTEM COMPONENTS.

6. EXISTING SERVICES: DO NOT INTERRUPT EXISTING SERVICES WITHOUT WRITTEN PERMISSION OF THE OWNER.

7. EQUIPMENT: CONNECT ELECTRICALLY OPERATED EQUIPMENT.

8. RECORD DRAWINGS: MAINTAIN A RECORD OF ALL CHANGES AND SUBSTITUTIONS BETWEEN WORK AS SPECIFIED AND INSTALLED. RECORD CHANGES ON A CLEAN SET OF CONTRACT DOCUMENTS WHICH SHALL BE TURNED OVER TO THE OWNER UPON COMPLETION OF THE PROJECT.

9. IDENTIFICATION: IDENTIFY SERVICE DISCONNECTING MEANS WITH PERMANENT NAME PLATE.

10. GUARANTEE/WARRANTY: GUARANTEE INSTALLATION TO BE FREE OF DEFECTS, SHORTS, GROUNDS, ETC., FOR A PERIOD OF ONE YEAR. FURNISH WARRANTY SO THE DEFECTIVE MATERIALS AND/OR WORKMANSHIP WILL BE REPAIRED/REPLACED IMMEDIATELY UPON NOTIFICATION AT NO COST TO THE OWNER FOR THE PERIOD OF THE WARRANTY.

11. CUTTING AND PATCHING: PROVIDE CUTTING REQUIRED TO DO THE WORK. DO NOT CUT MAJOR STRUCTURAL ELEMENTS WITHOUT APPROVAL. PATCHING SHALL BE OF QUALITY EQUAL TO AND OF MATCHING APPEARANCE OF EXISTING CONSTRUCTION.

12. DITCHING AND BACKFILL: PROVIDE FOR ALL UNDERGROUND INSTALLED CONDUIT AND/OR CABLES.

13. RACEWAYS: UNDERGROUND CONDUIT SHALL BE SCHEDULE 80 PVC CONDUIT (MEET NEMA TC2 - 1990). EXPOSED CONDUIT SHALL BE RIGID GALVANIZED STEEL CONDUIT. UNDERGROUND PVC CONDUIT SHALL TRANSITION TO RIGID GALVANIZED STEEL CONDUIT BEFORE RISING ABOVE GRADE. PLUG AND CAP EACH END OF SPARE AND EMPTY CONDUITS AND PROVIDE TWO SEPARATE PULL STRINGS - 200 LB. TEST POLYETHYLENE CORD. ALL CONDUIT BENDS SHALL BE A MINIMUM OF 24" RADIUS. RGS CONDUITS WHEN SPECIFIED, SHALL MEET UL-6 FOR GALVANIZED STEEL. ALL FITTINGS SHALL BE SUITABLE FOR USE WITH THREADED RIGID CONDUIT.

14. SUPPORTS: AS REQUIRED BY THE NEC.

15. CONDUCTORS: USE 98% CONDUCTIVITY COPPER WITH TYPE THHN OR EQUIVALENT 90°C INSULATION, 600 VOLT, COLOR CODED. USE SOLID CONDUCTORS FOR WIRE UP TO AND INCLUDING NO. 10 AWG. USE STRANDED CONDUCTORS FOR WIRE ABOVE NO. 10 AWG.

16. CONNECTORS FOR POWER CONDUCTORS: USE COMPRESSION TYPE INSULATED CONNECTORS FOR #10 AWG AND SMALLER. USE SOLDERLESS MECHANICAL TERMINAL LUGS FOR #8 AWG AND LARGER.

17. GROUNDING: MAIN GROUNDING CONDUCTORS SHALL BE A MINIMUM OF #2 AWG SOLID TINNED COPPER. GROUNDING LEADS ON ANTENNA SUPPORT STRUCTURES SHALL BE A MINIMUM OF #2 AWG SOLID BARE COPPER AND SHALL BE TINNED WHERE THEY ARE INSTALLED AGAINST THE STRUCTURE. GROUND BARS SHALL BE 1/4" THICK, 4" WIDE, LENGTH AS REQUIRED. GROUND RESISTANCE TO BE 5 OHM MAXIMUM. PROVIDE ADDITIONAL GROUNDING PLATES AS REQUIRED.

18. TELEPHONE SERVICE: PROVIDE EMPTY CONDUITS WITH PULL WIRES (10' ON EACH SIDE OF CONDUIT).

19. SERVICE: 240/120, SINGLE PHASE, 3 WIRE, 200 AMP FROM THE METER.

LESSEE

TeleCAD Wireless
1961 NORTHPOINT BLVD, SUITE 130
HIXSON, TN 37343
PH: 423-843-9500
FAX: 423-843-9509

THE INFORMATION CONTAINED IN THIS SET OF DOCUMENTS IS PROPRIETARY BY NATURE. ANY USE OR DISCLOSURE OTHER THAN THAT WHICH RELATES TO THE CLIENT IS STRICTLY PROHIBITED.

A&E PROJECT #:	20171560891
DRAWN BY:	JSJ
CHECKED BY:	DMB

REVISIONS

NO.	DATE	BY	DESCRIPTION
4	11/10/17	CAD	CONSTRUCTION ISSUE
3	10/30/17	CAD	PRELIMINARY REVIEW
2	10/23/17	CAD	PRELIMINARY REVIEW
1	09/22/17	CAD	PRELIMINARY REVIEW
0	08/11/17	JSJ	PRELIMINARY REVIEW

NORTH CAROLINA PROFESSIONAL SEAL NO. 032507 ENGINEER STEPHEN E. HUNT
11/10/17

PROJECT No.
20171560891

SITE NAME:
BIG ECHO

SITE NUMBER:
443109

SITE ADDRESS:
137 DAVES ROAD
MOORESBORO, NC 28114

DESIGN TYPE:
RAWLAND

SHEET TITLE:
ELECTRICAL SPECIFICATIONS

DRAWING NO.	REVISION:
E3	0

11/10/2017 2:08:16 PM, coreyday

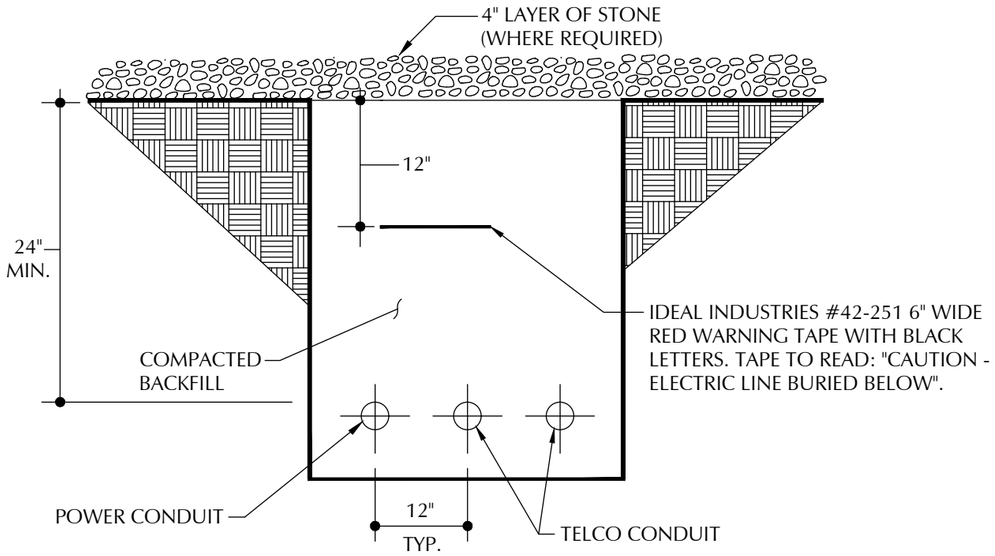

NOTE: TYPICAL SPACING FOR
ALL UNDERGROUND CONDUITS.

TRENCH DETAIL

NTS

40 / E1

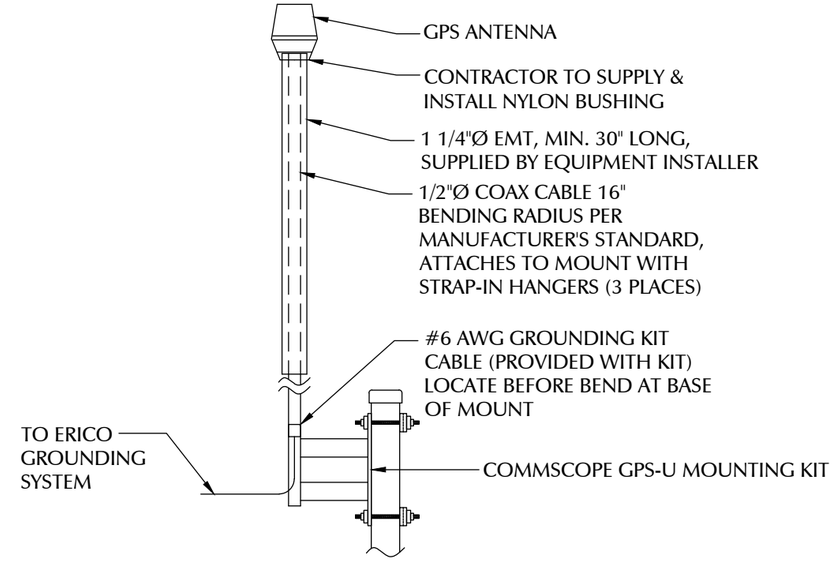

1. EQUIPMENT INSTALLER IS RESPONSIBLE FOR INSTALLATION OF ANTENNA, MOUNTS, & COAX.
2. CONTRACTOR IS RESPONSIBLE FOR GPS MOUNTING PIPE, GROUND AND CLAMP AROUND THE MAST FOR THE GPS.
3. GPS ANTENNA TO BE MOUNTED TO EXTENDED ICE BRIDGE POST, OR TO STANDARD HEIGHT POST USING EXTENDED MOUNTING PIPE, USING COMMSCOPE GPS-U MOUNTING KIT. MOUNT AS NEAR AS IS PRACTICAL TO RBA72 CABINET.

GPS MOUNTING DETAIL

NTS

35 / E1

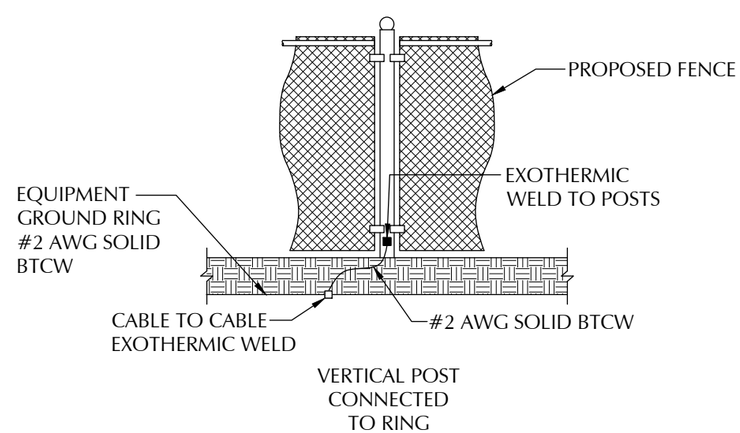

FENCE GROUNDING

NTS

42 / E2

LESSEE

TeleCAD Wireless
1961 NORTHPOINT BLVD, SUITE 130
HIXSON, TN 37343
PH: 423-843-9500
FAX: 423-843-9509

THE INFORMATION CONTAINED IN THIS SET OF DOCUMENTS IS PROPRIETARY BY NATURE. ANY USE OR DISCLOSURE OTHER THAN THAT WHICH RELATES TO THE CLIENT IS STRICTLY PROHIBITED.

A&E PROJECT #:	20171560891
DRAWN BY:	JSJ
CHECKED BY:	DMB

REVISIONS

NO.	DATE	BY	DESCRIPTION
4	11/10/17	CAD	CONSTRUCTION ISSUE
3	10/30/17	CAD	PRELIMINARY REVIEW
2	10/23/17	CAD	PRELIMINARY REVIEW
1	09/22/17	CAD	PRELIMINARY REVIEW
0	08/11/17	JSJ	PRELIMINARY REVIEW

NORTH CAROLINA PROFESSIONAL SEAL NO. 032507 ENGINEER STEPHEN E. HUNT 11/10/17

PROJECT No.
20171560891

SITE NAME:
BIG ECHO

SITE NUMBER:
443109

SITE ADDRESS:
137 DAVES ROAD
MOORESBORO, NC 28114

DESIGN TYPE:
RAWLAND

SHEET TITLE:
ELECTRICAL DETAILS

DRAWING NO.: E4

REVISION: 0

11/10/2017 2:08:17 PM, coreyday

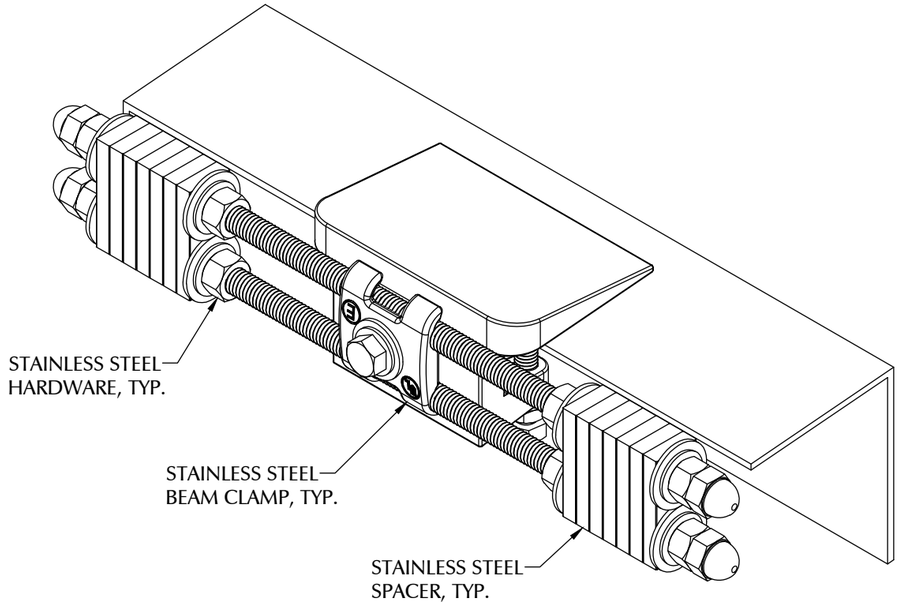

ERICO GROUND BEAM CLAMP (TDSGA-BC14) 36 --

NTS

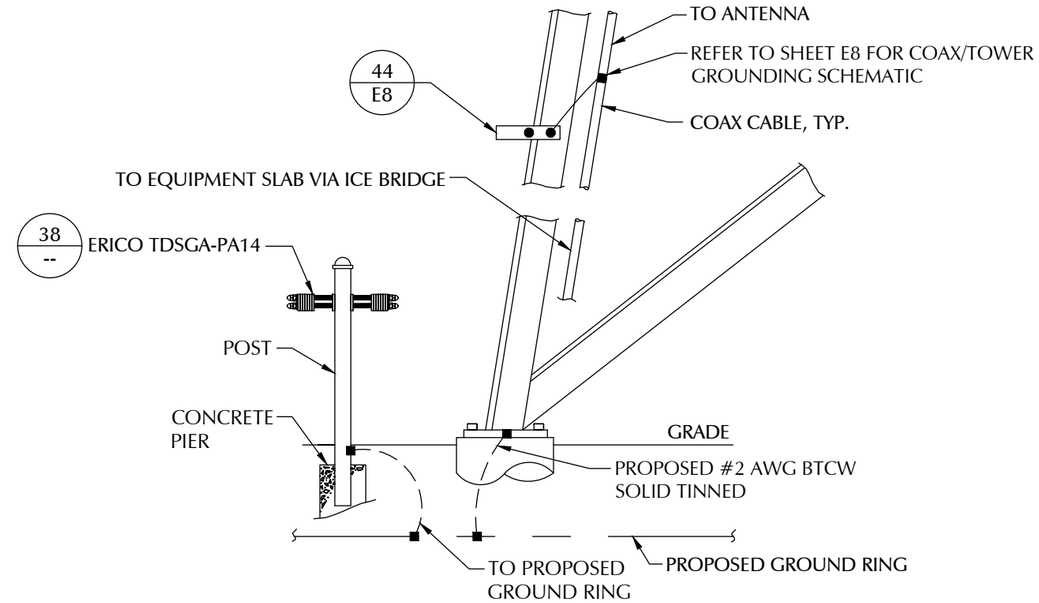

ANTENNA CABLE GROUNDING FOR SELF SUPPORT TOWER 46 --

NTS

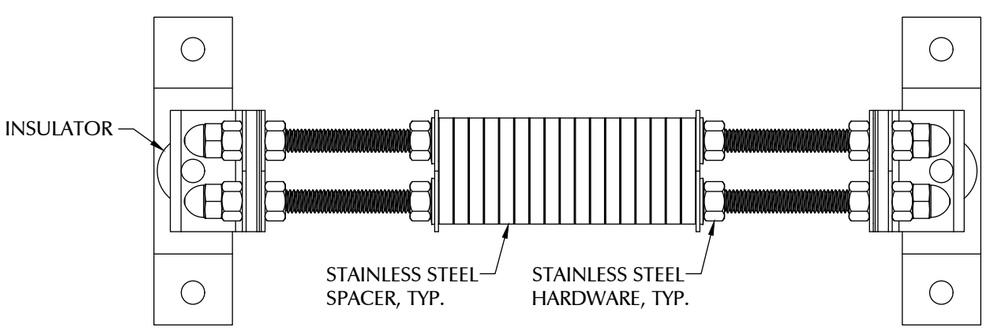

ERICO INSULATED (TDSGA-WB17) 37 --

NTS

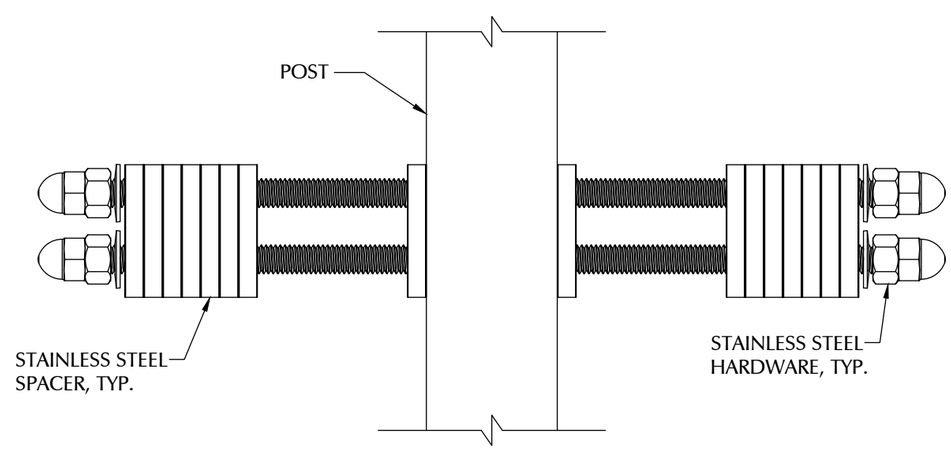

ERICO POST MOUNTED (TDSGA-PA14) 38 --

NTS

LESSEE

TeleCAD Wireless
1961 NORTHPOINT BLVD, SUITE 130
HIXSON, TN 37343
PH: 423-843-9500
FAX: 423-843-9509

THE INFORMATION CONTAINED IN THIS SET OF DOCUMENTS IS PROPRIETARY BY NATURE. ANY USE OR DISCLOSURE OTHER THAN THAT WHICH RELATES TO THE CLIENT IS STRICTLY PROHIBITED.

A&E PROJECT #:	20171560891
DRAWN BY:	JSJ
CHECKED BY:	DMB

REVISIONS

NO.	DATE	BY	DESCRIPTION
6	11/10/17	CAD	CONSTRUCTION ISSUE
5	10/30/17	CAD	PRELIMINARY REVIEW
4	10/23/17	CAD	PRELIMINARY REVIEW
3	09/22/17	CAD	PRELIMINARY REVIEW
2	08/11/17	JSJ	PRELIMINARY REVIEW

NORTH CAROLINA PROFESSIONAL SEAL NO. 032507 ENGINEER STEPHEN E. HUNT 11/10/17

PROJECT No.
20171560891

SITE NAME:
BIG ECHO

SITE NUMBER:
443109

SITE ADDRESS:
137 DAVES ROAD
MOORESBORO, NC 28114

DESIGN TYPE:
RAWLAND

SHEET TITLE:
ELECTRICAL DETAILS

DRAWING NO. E5

REVISION: 0

11/10/2017 2:08:18 PM, coreyday

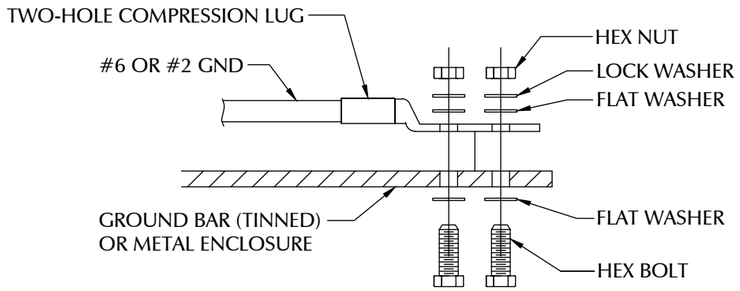

INSTALLATION NOTES:
1. BOLTS, WASHERS, AND NUTS SHALL BE STAINLESS STEEL.
2. SELECT BOLT LENGTH TO PROVIDE A MINIMUM OF TWO EXPOSED THREADS.
3. BURNISH MOUNTING SURFACE TO REMOVE PAINT IN THE AREA OF LUG CONTACT.
4. APPLY ANTI-OXIDANT COMPOUND TO MATING SURFACE OF LUG & WIPE CLEAN EXCESS COMPOUND.
5. USE 1/4" HARDWARE FOR ATTACHMENT TO METAL ENCLOSURES & 3/8" FOR ATTACHMENT TO GROUND BARS.
6. ALL BOLTS MUST HAVE AT LEAST 2 THREAD ENGAGEMENT.

GROUNDING CONNECTION TO GROUND BAR OR FLAT SURFACE

45 / --

NTS

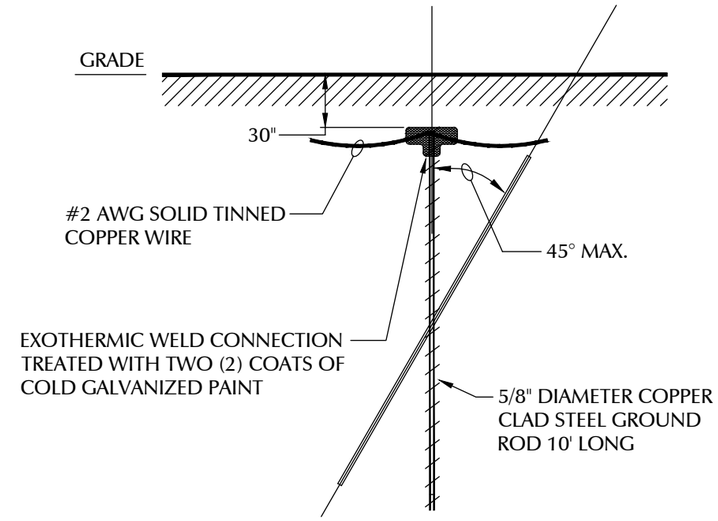

GROUND ROD DETAIL

49 / E2

NTS

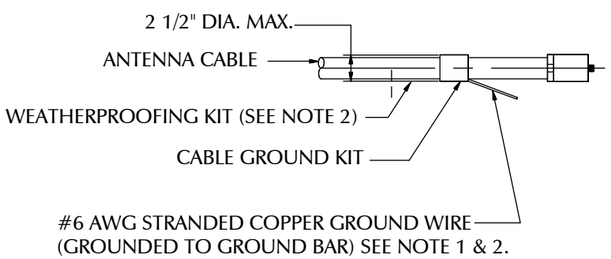

GROUND KIT NOTES:
1. DO NOT INSTALL CABLE GROUND KIT AT A BEND AND ALWAYS DIRECT GROUND WIRE DOWN TO GROUND BAR.
2. GROUNDING KIT AND WEATHER PROOFING KIT SHALL BE OF THE SAME TYPE AND PART NUMBER AS SUPPLIED OR RECOMMENDED BY CABLE MANUFACTURER.

CONNECTION OF CABLE GROUND KIT TO ANTENNA CABLE

47 / --

NTS

REMOVABLE COVER TO BE PAINTED RED AT TOWER RING CONNECTIONS.

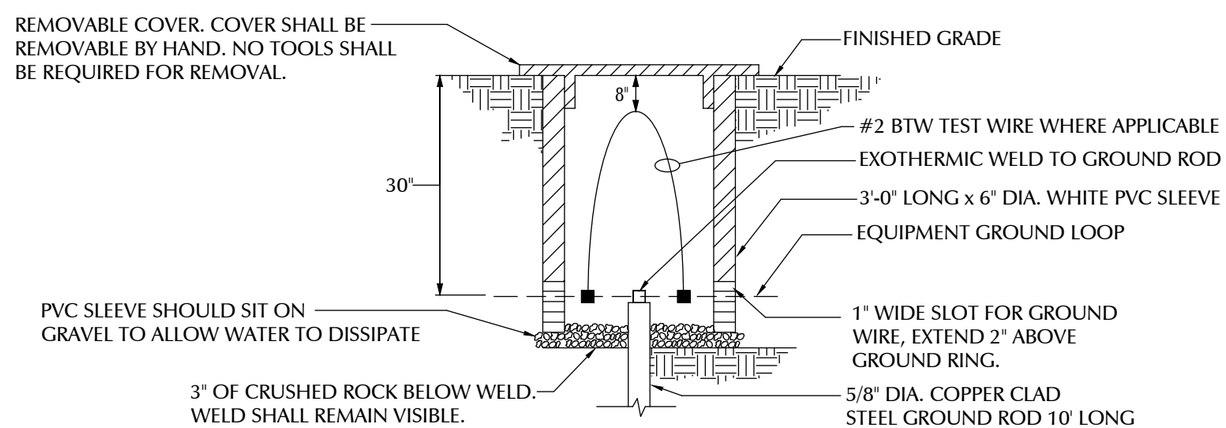

GROUND ROD TEST WELL DETAIL

48 / --

NTS

LESSEE

TeleCAD Wireless
1961 NORTHPOINT BLVD, SUITE 130
HIXSON, TN 37343
PH: 423-843-9500
FAX: 423-843-9509

THE INFORMATION CONTAINED IN THIS SET OF DOCUMENTS IS PROPRIETARY BY NATURE. ANY USE OR DISCLOSURE OTHER THAN THAT WHICH RELATES TO THE CLIENT IS STRICTLY PROHIBITED.

A&E PROJECT #:	20171560891
DRAWN BY:	JSJ
CHECKED BY:	DMB

REVISIONS

NO.	DATE	BY	DESCRIPTION
6	11/10/17	CAD	CONSTRUCTION ISSUE
5	10/30/17	CAD	PRELIMINARY REVIEW
4	10/23/17	CAD	PRELIMINARY REVIEW
3	09/22/17	CAD	PRELIMINARY REVIEW
2	08/11/17	JSJ	PRELIMINARY REVIEW

NORTH CAROLINA PROFESSIONAL SEAL NO. 032507 ENGINEER STEPHEN E. HUNT 11/10/17

PROJECT No. 20171560891

SITE NAME: BIG ECHO

SITE NUMBER: 443109

SITE ADDRESS: 137 DAVES ROAD MOORESBORO, NC 28114

DESIGN TYPE: RAWLAND

SHEET TITLE: ELECTRICAL DETAILS

DRAWING NO. E6 | REVISION: 0

11/10/2017 2:08:19 PM, coreyday

FRONT

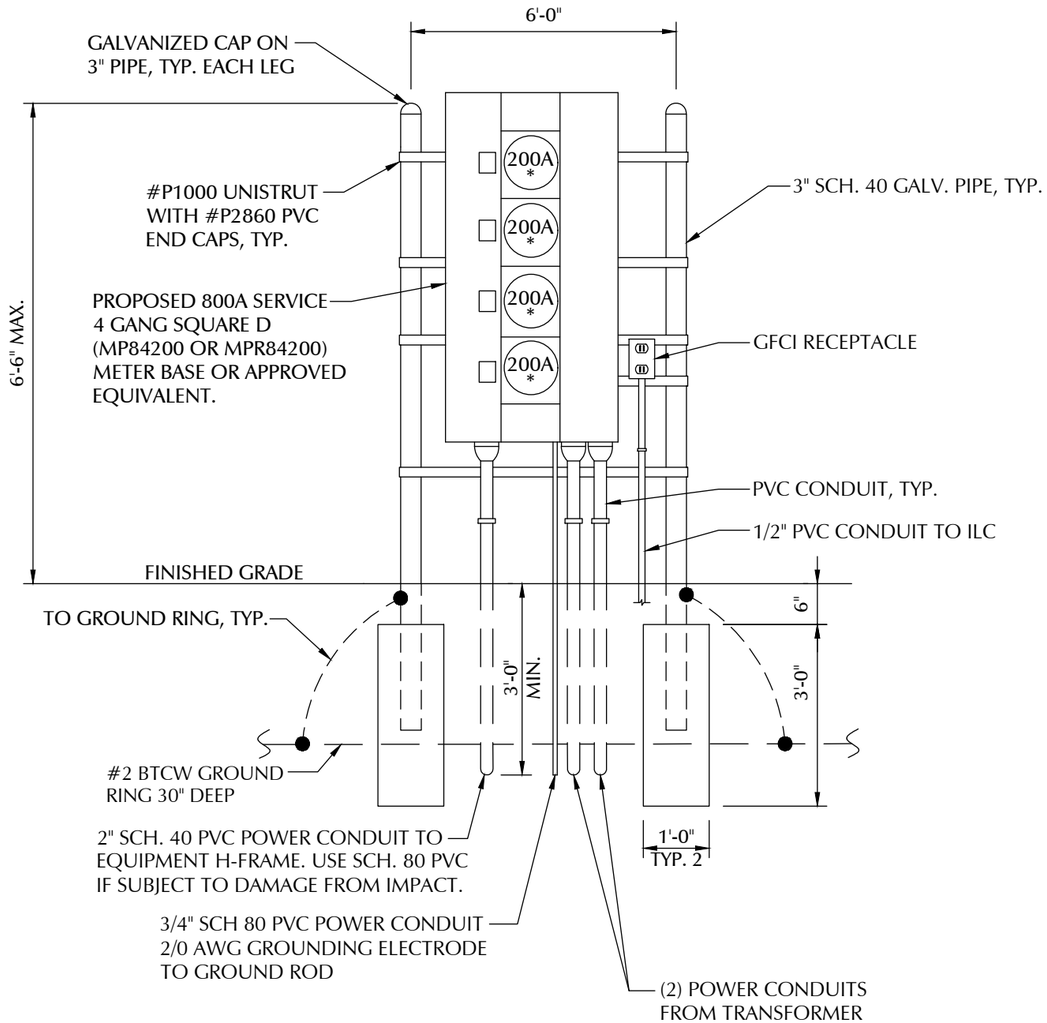

BACK

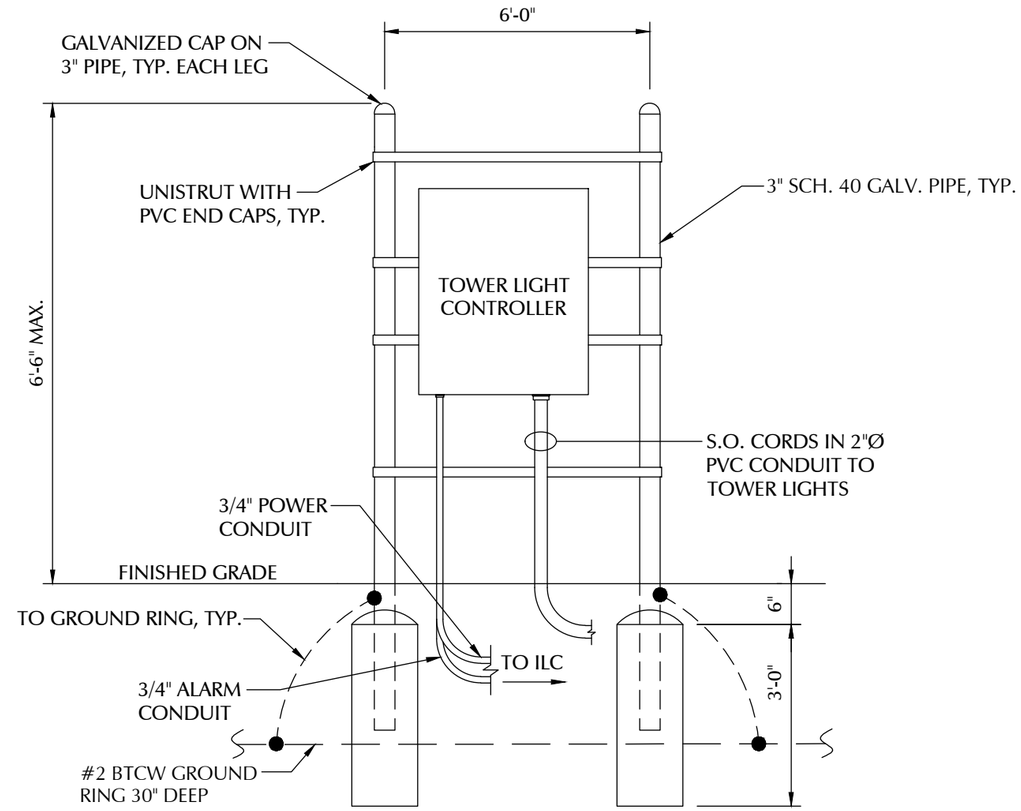

UTILITY NOTE:

1. ALL POWER CONDUITS ABOVE GRADE TO BE SCH. 40 OR SCH. 80 PVC IF SUBJECT TO DAMAGE FROM IMPACT.
2. GC TO INSTALL PHENOLIC NAMES PLATES ON ALL VERIZON ITEMS (HOFFMAN BOX, METER, BREAKER, ETC.)

METER CENTER DETAIL

NTS

50
E1

CONTRACTOR TO GROUND ALL DEVICES TO EXTERIOR GROUND RING. CONTRACTOR TO REMOVE PAINT FOR CONTACT TO METAL SURFACES WHERE THEY MAKE CONTACT WITH TWO HOLE LUG. INSTALL AN ANTI-OXIDANT COMPOUND BETWEEN LUG AND METAL SURFACE (NOALOX, COPPER SHIELD OR EQUIVALENT). INSTALL #2 AWG BTCW IN 3/4" PVC AND SEAL TOP OF CONDUIT WITH CLEAR SILICONE. SECURE PVC PIPE TO RACK WITH 2-PIECE UNISTRUT PIPE CLAMP.

LESSEE

TeleCAD Wireless
1961 NORTHPOINT BLVD, SUITE 130
HIXSON, TN 37343
PH: 423-843-9500
FAX: 423-843-9509

THE INFORMATION CONTAINED IN THIS SET OF DOCUMENTS IS PROPRIETARY BY NATURE. ANY USE OR DISCLOSURE OTHER THAN THAT WHICH RELATES TO THE CLIENT IS STRICTLY PROHIBITED.

A&E PROJECT #:	20171560891
DRAWN BY:	JSJ
CHECKED BY:	DMB

REVISIONS

NO.	DATE	BY	DESCRIPTION
A	11/10/17	CAD	CONSTRUCTION ISSUE
B	10/30/17	CAD	PRELIMINARY REVIEW
C	10/23/17	CAD	PRELIMINARY REVIEW
D	09/22/17	CAD	PRELIMINARY REVIEW
E	08/11/17	JSJ	PRELIMINARY REVIEW

NORTH CAROLINA PROFESSIONAL SEAL NO. 032507 ENGINEER STEPHEN E. HUNT 11/10/17

PROJECT No.
20171560891

SITE NAME:
BIG ECHO

SITE NUMBER:
443109

SITE ADDRESS:
137 DAVES ROAD
MOORESBORO, NC 28114

DESIGN TYPE:
RAWLAND

SHEET TITLE:
ELECTRICAL DETAILS

DRAWING NO. E6A

REVISION: 0

11/10/2017 2:08:20 PM, coreyday

KEY NOTES – ELECTRICAL EQUIPMENT

1. H–FRAME POST WITH AREA LIGHT, LITHONIA HFR SERIES, 250W METAL HALIDE, SCWA BALLAST, NATURAL ALUMINUM FINISH (OR APPROVED EQUIVALENT)
2. NEMA 3R ENCLOSURE PVC TELCO BOX WITH REMOVABLE FRONT PANEL (18" x 18" x 6" NOMINAL)
3. 20 AMP GFCI DUPLEX RECEPTACLE IN LOCKABLE WEATHERPROOF ENCLOSURE.
4. 200 AMP, 120/240 VOLT, ILC WITH 42 SPACE PANEL AND AUTOMATIC TRANSFER SWITCH (30" x 60" x 10" NOMINAL). ILC FURNISHED BY VZW AND INSTALLED BY GC.
5. 200 AMP, 120/240 VOLT, SAFETY DISCONNECT SWITCH IN NEMA 3R ENCLOSURE (15" X 30" x 9" NOMINAL)
6. TIMER SWITCH, ENERLITES HET06 SERIES (OR APPROVED EQUIVALENT) IN WEATHERPROOF ENCLOSURE WITH CLEAR PLASTIC COVER.

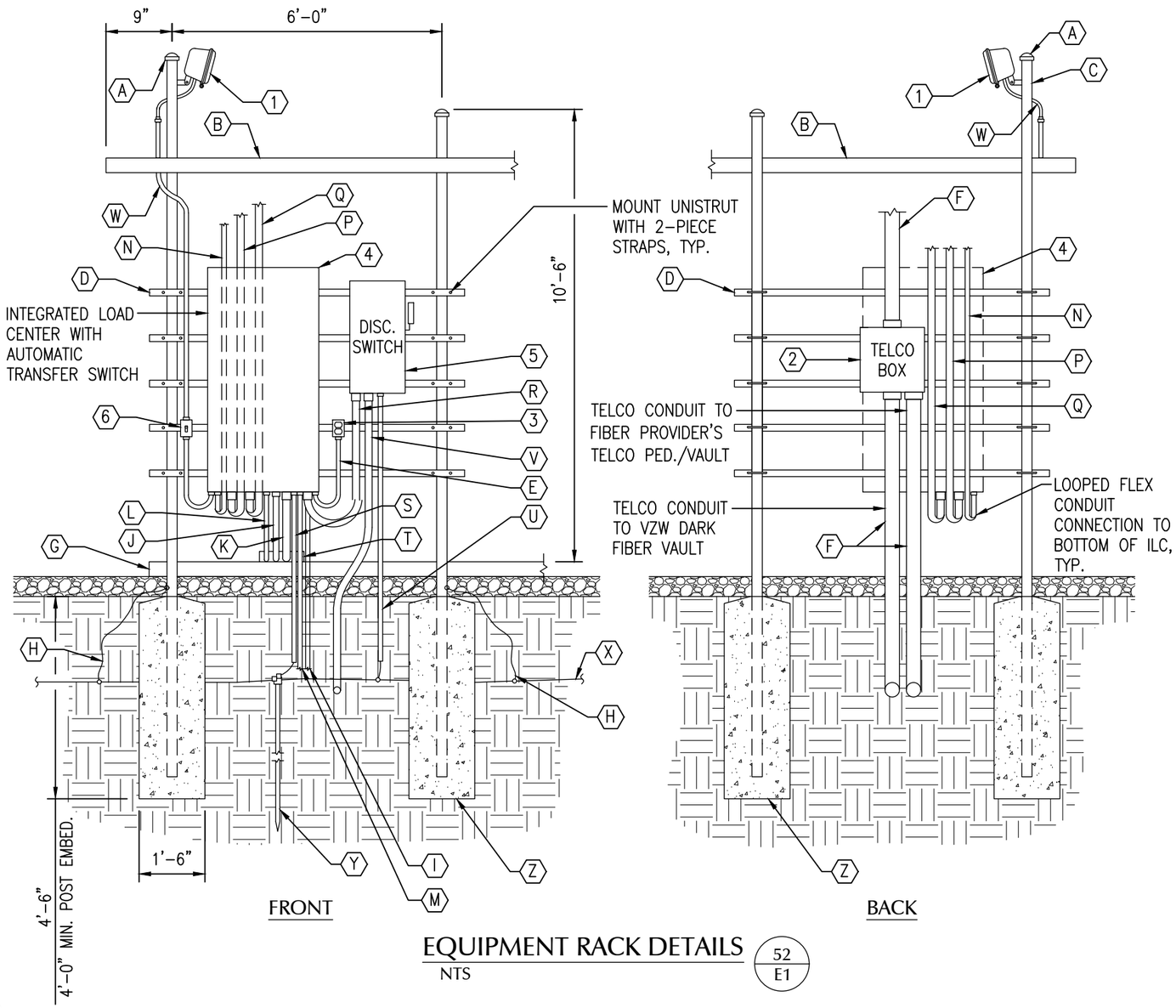

EQUIPMENT RACK DETAILS

NTS

52 / E1

KEY NOTES – CONDUIT, CONDUCTORS, & MISC.

- A GALVANIZED RIGID STEEL CAP, TYP.
- B ICE BRIDGE, SEE C SHEETS FOR ADDITIONAL DETAILS. ROUTE ALL NON–GENERATOR CONDUITS OVERHEAD ON ICE BRIDGE
- C 3" GALVANIZED RIGID STEEL PIPE, TYP. EXTEND H–FRAME OR ICE BRIDGE POST HIGHER TO SUPPORT AREA LIGHT FIXTURES AT LOCATIONS AS NOTED.
- D 1–5/8" x 1–5/8" GALVANIZED STEEL CHANNEL (UNISTRUT #P1000) W/PLASTIC END CAP (UNISTRUT #P2860), TYP.
- E 1/2" PVC CONDUIT FOR ROUTING POWER CONDUCTORS TO DUPLEX OUTLET.
- F 4" PVC CONDUIT WITH (3) 1–1/4" INNERDUCTS FOR TELCO CABLES.
- G SLAB BEHIND EQUIPMENT RACK.
- H (1) #2 AWG BARE SOLID TINNED COPPER GROUNDING ELECTRODE CONDUCTOR (GEC) FROM H–FRAME VERTICAL PIPE TO GROUND RING, EXOTHERMIC WELD BOTH ENDS.
- I 3/4" ALARM CONDUIT TO TOWER LIGHT CONTROLLER
- J 1–1/4" PVC CONDUIT FOR ROUTING GENERATOR CONTROL AND ALARM SIGNAL CABLES TO GENERATOR
- K 2" PVC CONDUIT FOR ROUTING POWER CONDUCTORS TO THE GENERATOR.
- L 3/4" PVC CONDUIT FOR ROUTING POWER CONDUCTORS TO THE GENERATOR BATTERY CHARGER AND BLOCK HEATER
- M 3/4" PVC CONDUIT TO TOWER LIGHT CONTROLLER
- N 3/4" PVC CONDUIT FROM INTEGRATED LOAD CENTER (ILC) TO RBA72 FOR ALARM SIGNAL CABLES
- P 2" PVC CONDUIT FOR ROUTING POWER CONDUCTORS TO RBA72
- Q 2" PVC CONDUIT FOR ROUTING POWER CONDUCTORS TO RBS–6120
- R 2" PVC CONDUIT FOR ROUTING POWER CONDUCTORS FROM THE DISCONNECT SWITCH TO THE UTILITY BREAKER IN THE ILC.
- S 3/4" PVC WITH (1) – 2/0 BARE STRANDED TINNED COPPER GEC FROM GROUNDING LUG IN ILC TO GROUND ROD, EXOTHERMIC WELD GEC TO GROUND ROD.
- T CABLE TRAY, SEE SHEET C3B FOR ADDITIONAL DETAILS.
- U 3/4" PVC WITH (1) – 2/0 BARE STRANDED TINNED COPPER GEC FROM GROUNDING LUG IN DISCONNECT SWITCH TO GROUND RING, EXOTHERMIC WELD GEC TO GROUND RING.
- V 2" PVC CONDUIT FOR ROUTING POWER CONDUCTORS FROM THE UTILITY COMPANY METER TO THE DISCONNECT SWITCH.
- W 1/2" PVC CONDUIT FOR ROUTING POWER CONDUCTORS TO AREA LIGHTS.
- X GROUND RING, SEE SHEETS E2 AND E9 FOR ADDITIONAL DETAILS.
- Y GROUND ROD, EXOTHERMIC WELD TO GROUND RING, SEE DETAIL 49/E6.
- Z CONCRETE FOUNDATION FOR H–FRAME VERTICAL PIPE. CONCRETE SHALL HAVE A 28 DAY COMPRESSIVE STRENGTH OF 3,000 PSI.

LESSEE

TeleCAD Wireless
1961 NORTHPOINT BLVD, SUITE 130
HIXSON, TN 37343
PH: 423-843-9500
FAX: 423-843-9509

THE INFORMATION CONTAINED IN THIS SET OF DOCUMENTS IS PROPRIETARY BY NATURE. ANY USE OR DISCLOSURE OTHER THAN THAT WHICH RELATES TO THE CLIENT IS STRICTLY PROHIBITED.

A&E PROJECT #:	20171560891
DRAWN BY:	JSJ
CHECKED BY:	DMB

REVISIONS

NO.	DATE	BY	DESCRIPTION
6	11/10/17	CAD	CONSTRUCTION ISSUE
5	10/30/17	CAD	PRELIMINARY REVIEW
4	10/23/17	CAD	PRELIMINARY REVIEW
3	09/22/17	CAD	PRELIMINARY REVIEW
2	08/11/17	JSJ	PRELIMINARY REVIEW

NORTH CAROLINA PROFESSIONAL SEAL NO. 032507 ENGINEER STEPHEN E. HUNT 11/10/17

PROJECT No. 20171560891

SITE NAME: BIG ECHO

SITE NUMBER: 443109

SITE ADDRESS: 137 DAVES ROAD MOORESBORO, NC 28114

DESIGN TYPE: RAWLAND

SHEET TITLE: ELECTRICAL DETAILS

DRAWING NO. E6B

REVISION: 0

11/10/2017 2:08:21 PM, coreyday

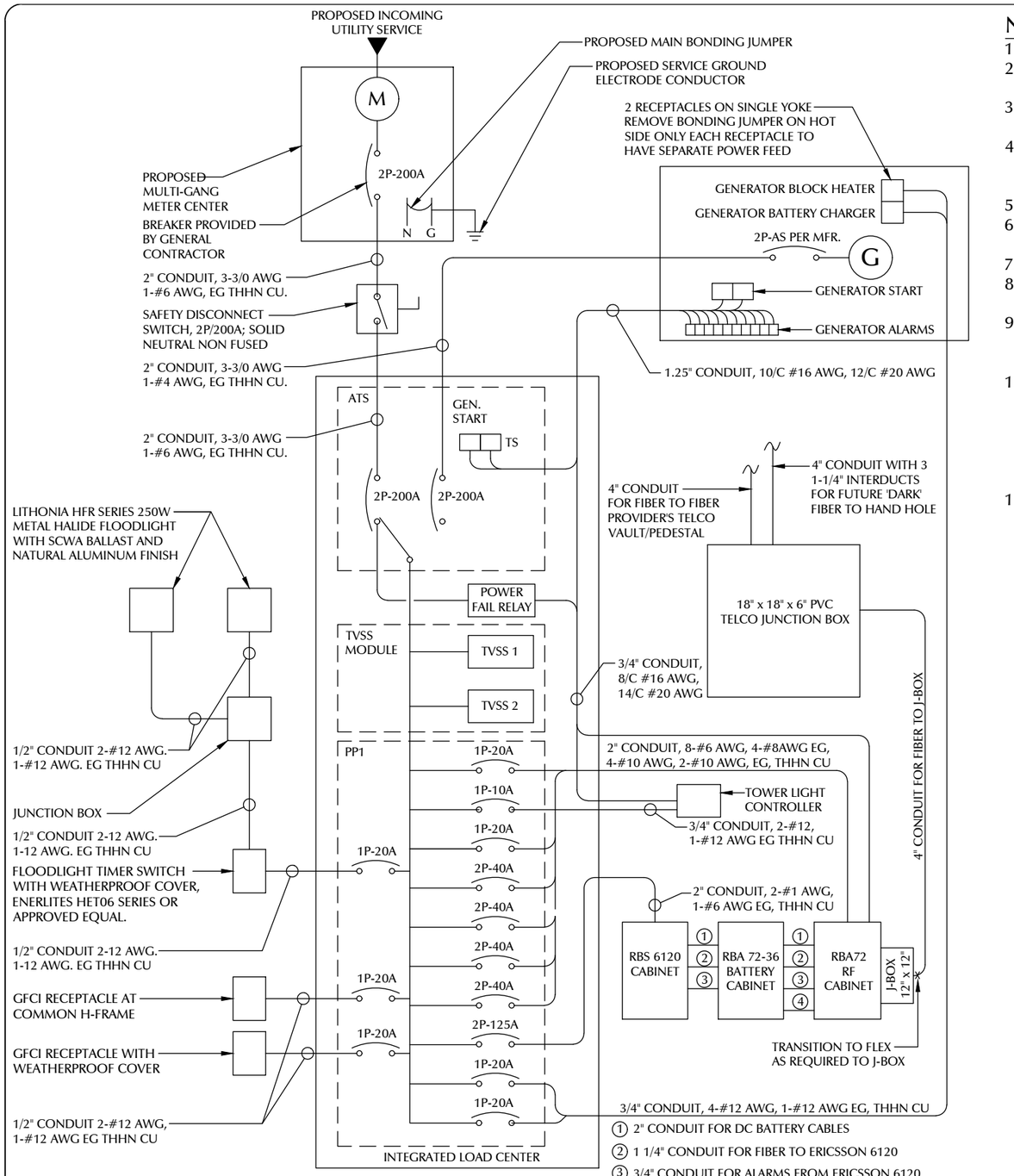

① 2" CONDUIT FOR DC BATTERY CABLES
② 1 1/4" CONDUIT FOR FIBER TO ERICSSON 6120
③ 3/4" CONDUIT FOR ALARMS FROM ERICSSON 6120
④ 3/4" CONDUIT FOR POWER TO GFCI OUTLET IN BATTERY CABINET

CONNECT DC POWER PLANT IN COMMSCOPE RBA72 CABINET TO 48 VOLT BATTERY STRINGS #1, #2, #3 LOCATED ON LOWER TWO SHELVES OF THE RBA72-36 BATTERY CABINET. CONNECT DC POWER IN ERICCSON RBS-6120 CABINET TO 48 VOLT BATTERY STRINGS #4, #5, #6 LOCATED ON UPPER TWO SHELVES OF THE RBA72-36 BATTERY CABINET. IN THE CASE WHERE NO RBS6120 IS USED, ALL THE APPLICABLE BATTERY STRINGS SHALL BE DIRECTLY CONNECTED TO THE RBA72 CABINET.

POWER & TELCO SINGLE LINE DIAGRAM

NTS

51 / E1

NOTES:

1. ELECTRICAL SERVICE SHALL BE 200A, 120V / 208V OR 240V, 1Ø 3W.
2. PROVIDE SERVICE ENTRANCE RATED FUSIBLE SERVICE DISCONNECT SWITCH IF REQUIRED BY LOCAL UTILITY COMPANY. DOOR TO POWER PANEL CONTAINING MAIN DISCONNECT TO REMAIN UNLOCKED.
3. FOR COMPLETE INTERNAL WIRING AND ARRANGEMENT, REFER TO VENDOR PRINTS PROVIDED BY UTILITY CABINET MANUFACTURER.
4. INSTALL A 200A SERVICE DISCONNECT OTHER THAN MAIN BREAKER IN POWER PANEL (IF REQUIRED) REMOVE BONDING JUMPER IN UTILITY CABINET AND BOND SERVICE DISCONNECT PER NEC REQUIREMENTS.
5. ALL WIRING SHALL BE COPPER WITH THHN INSULATION.
6. ALL ELECTRICAL WORK INCLUDING COMPONENTS AND WIRING PER NATIONAL ELECTRICAL CODE (NEC), STATE AND LOCAL CODE.
7. GENERAL CONTRACTOR TO LABEL BREAKERS IN POWER CABINET AS NOTED ON "POWER PANEL SCHEDULE".
8. WALKING BEAM INTERLOCK SHALL BE PROVIDED WITH BREAKERS FROM INTEGRATED LOAD CENTER VENDOR, FIELD TO VERIFY.
9. THE GENERATOR USED IN CONJUNCTION WITH A 2-POLE AUTOMATIC TRANSFER SWITCH WITH A SOLID NEUTRAL IS NOT A SEPARATELY DERIVED SYSTEM. AS SUCH, DO NOT BOND THE NEUTRAL TO GROUND AT GENERATOR.
10. PRIOR TO PURCHASING EQUIPMENT, THE CONTRACTOR SHALL CONTACT THE ELECTRIC UTILITY AND OBTAIN IN WRITING THE MAXIMUM AVAILABLE FAULT CURRENT (AFC) AT THE UTILITY SERVICE POINT. PROVIDE MAX. AFC SIGNAGE AS REQUIRED PER NEC 110.24. THE CONTRACTOR SHALL ENSURE ALL ELECTRICAL EQUIPMENT, CIRCUIT BREAKERS, DISCONNECTS, FUSES, AND PANELBOARDS HAVE A FAULT CURRENT INTERRUPTING RATING GREATER THAN THE AVAILABLE FAULT CURRENT. IN NO CASE SHALL THE FAULT CURRENT INTERRUPTING RATING BE LESS THAN 10,000 AMPS.
11. PER NEC ART. 702 PROVIDE SIGNAGE AS FOLLOWS:
    A. AT PANEL PP1 AND DISCONNECT: "EMERGENCY POWER IS SUPPLIED BY STAND-BY GENERATOR LOCATED ON OTHER SIDE OF PAD."
    B. AT SERVICE DISCONNECT: (NOTE: OPENING EQUIPMENT DISCONNECT CAUSES GENERATOR TO START. TO REMOVE POWER ENTIRELY, THE GENERATOR BREAKER MUST BE OPEN.)

WARNING - SHOCK HAZARD EXISTS IF GROUNDING ELECTRODE CONDUCTOR OR BONDING JUMPER CONNECTION IN THIS EQUIPMENT IS REMOVED WHILE ALTERNATE SOURCE(S) IS ENERGIZED.

LOAD SERVED	kVA / phase A	kVA / phase B	Load Type	Circuit Breaker	Circuit Number		Circuit Breaker	Load Type	kVA / phase A	kVA / phase B	LOAD SERVED
Generator Battery Charger	0.10		C	1P-20	1	2	2P-40	C		2.88	RBA 72-30 Rectifier #1
Generator Block Heater		0.50	C	1P-20	3	4			2.88		
GFCI Receptacle H-Frame	0.18		NC	1P-20	5	6	2P-40	C		2.88	RBA 72-30 Rectifier #2
GFCI Receptacle RBA 72		0.18	NC	1P-20	7	8			2.88		
Area Floodlights	0.50		NC	1P-20	9	10	2P-40	C		2.88	RBA 72-30 Rectifier #3
Ericsson RBS 6120 (3 PSU's)		2.34	C	2P-125	11	12			2.88		
	2.34				13	14	2P-40	C		0.00	RBA 72-30 Rectifier #4 (FUTURE)
GFCI RECEPTACLE BATT-CAB		0.18	NC	1P-20	15	16			0.00		
GFCI RECEPTACLE COMMON H-FRAME	0.18		NC	1P-20	17	18					
Tower Light Controller		0.08	C	1P-10	19	20					
					21	22					
					23	24					
					25	26					
TVSS		0.00	NC	2P-30	27	28					
	0.00				29	30					
Sub Total	3.30	3.28					Sub Total		8.64	8.64	Total

Panel Rating:	240/120 volt	1 Phase	3 Wire	LOAD DESCRIPTION		Connected kVA A	Connected kVA B	NEC Demand Factor	Demand kVA A	Demand kVA B
Mounting:	Surface	NEMA 3R	Outdoor							
Terminations:	75°C			General Lighting		0.00	0.00	125%	0.00	0.00
Isolated Ground Bus:	No			General Use Receptacles		0.36	0.36	≤ 10kVA@ 100%	0.36	0.36
Main Circuit Breaker:	No							> 10 kVA @ 50%	0.00	0.00
Service Entr. Rated:	No			Motors and Equipment	Largest	0.00	0.00	125%	0.00	0.00
Neutral to Ground Bond:	No				All other	0.00	0.00	100%	0.00	0.00
Minimum AIC, (kA):	TBD			Exterior Lighting		0.50	0.08	125%	0.63	0.10
MCB Rating:	MLO			Air Conditioning		0.00	0.00	100%	0.00	0.00
Bus Rating:	200A			Fixed Electric Space Heat		0.00	0.00	100%	0.00	0.00
Neutral Rating:	100%			Rectifiers		10.98	10.98	125%	13.73	13.73
Number of Branch Circuits	30			Dedicated Recept. Generator		0.10	0.50	125%	0.13	0.63
				Total kVA per Phase		11.94	11.92		14.84	14.81
Panel is inside an Integrated Load Center (ILC), 30 position (min.) with Built In ATS, TVSS Modules and AC Power Fail Relay				Total Demand Amperes per Phase					123.63	123.4166667
				Panel Feeder (Total kVA)					29.65	
ALL LOADS PROVIDED BY VERIZON LOCAL MARKET				[(Total kVA) * 1000]/Volts = Total Amps for Service Feeder					123.52	

POWER PANEL SCHEDULE

NTS

LESSEE

TeleCAD Wireless
1961 NORTHPOINT BLVD, SUITE 130
HIXSON, TN 37343
PH: 423-843-9500
FAX: 423-843-9509

THE INFORMATION CONTAINED IN THIS SET OF DOCUMENTS IS PROPRIETARY BY NATURE. ANY USE OR DISCLOSURE OTHER THAN THAT WHICH RELATES TO THE CLIENT IS STRICTLY PROHIBITED.

A&E PROJECT #:	20171560891
DRAWN BY:	JSJ
CHECKED BY:	DMB

REVISIONS

NO.	DATE	BY	DESCRIPTION
6	11/10/17	CAD	CONSTRUCTION ISSUE
5	10/30/17	CAD	PRELIMINARY REVIEW
4	10/23/17	CAD	PRELIMINARY REVIEW
3	09/22/17	CAD	PRELIMINARY REVIEW
2	08/11/17	JSJ	PRELIMINARY REVIEW

NORTH CAROLINA PROFESSIONAL SEAL NO. 032507 ENGINEER STEPHEN E. HUNT 11/10/17

PROJECT No.
20171560891

SITE NAME:
BIG ECHO

SITE NUMBER:
443109

SITE ADDRESS:
137 DAVES ROAD
MOORESBORO, NC 28114

DESIGN TYPE:
RAWLAND

SHEET TITLE:
SINGLE LINE DIAGRAM

DRAWING NO.: E7
REVISION: 0

11/10/2017 2:08:21 PM, coreyday

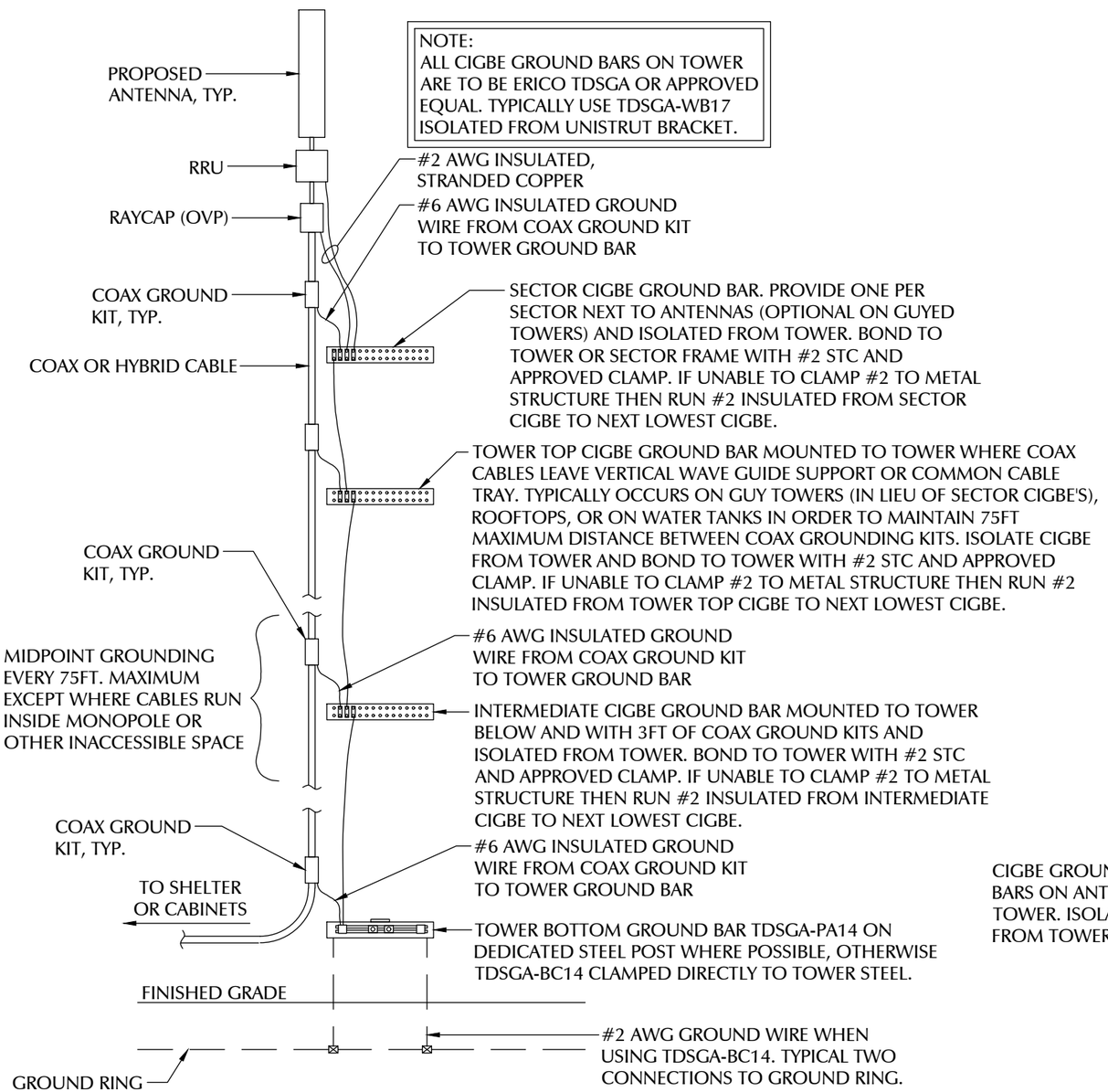

COAX/TOWER GROUNDING SCHEMATIC

NTS

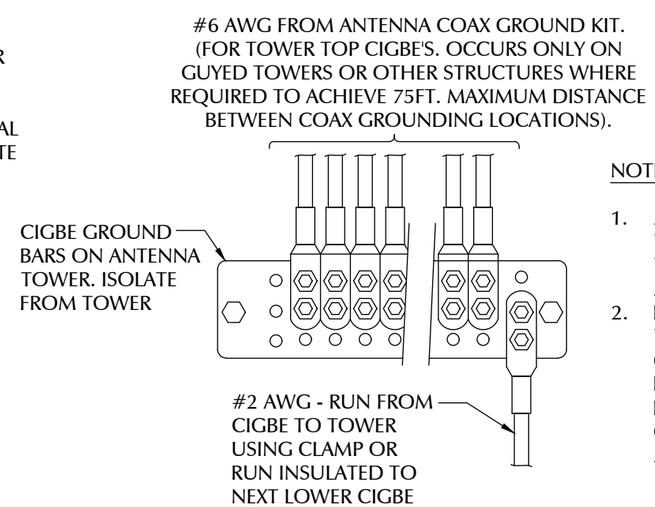

NOTES:

1. ALL CIGBE GROUND BARS ON TOWER ARE TO BE ERICO TDSGA. TYPICALLY USE TDSGA-WB17 ISOLATED FROM TOWER AND CONNECTED TO UNISTRUT BRACKET.
2. IF CIGBE CANNOT BE CONNECTED TO TOWER WITH #2 AWG AND CLAMP (OR CADWELD). THEN RUN #2 BLACK INSULATED GROUND LEAD FROM CIGBE DOWN TO NEXT LOWER CIGBE. SECURE GROUND LEAD WITH NON METALLIC TIES AT SAME SPACING AS COAX SUPPORTS.

ANTENNA GROUND WIRE INSTALLATION

NTS

44
E5

LESSEE

TeleCAD Wireless
1961 NORTHPOINT BLVD, SUITE 130
HIXSON, TN 37343
PH: 423-843-9500
FAX: 423-843-9509

THE INFORMATION CONTAINED IN THIS SET OF DOCUMENTS IS PROPRIETARY BY NATURE. ANY USE OR DISCLOSURE OTHER THAN THAT WHICH RELATES TO THE CLIENT IS STRICTLY PROHIBITED.

A&E PROJECT #:	20171560891
DRAWN BY:	JSJ
CHECKED BY:	DMB

REVISIONS

NO.	DATE	BY	DESCRIPTION
6	11/10/17	CAD	CONSTRUCTION ISSUE
5	10/30/17	CAD	PRELIMINARY REVIEW
4	10/23/17	CAD	PRELIMINARY REVIEW
3	09/22/17	CAD	PRELIMINARY REVIEW
2	08/11/17	JSJ	PRELIMINARY REVIEW

NORTH CAROLINA PROFESSIONAL SEAL NO. 032507 ENGINEER STEPHEN E. HUNT 11/10/17

PROJECT No.
20171560891

SITE NAME:
BIG ECHO

SITE NUMBER:
443109

SITE ADDRESS:
137 DAVES ROAD
MOORESBORO, NC 28114

DESIGN TYPE:
RAWLAND

SHEET TITLE:
ELECTRICAL DETAILS

DRAWING NO.
E8

REVISION:
0

11/10/2017 2:08:22 PM, coreyday

NOTES:

1. CONNECT COAX GROUND KITS DIRECTLY TO TOWER TOP CIGBE ONLY AS NOTED ON DETAIL 2/E7A.
2. FOR GROUNDING CONNECTIONS AND DETAILS, SEE SITE GROUNDING PLAN.
3. TOWER GROUND BARS WILL BE ISOLATED FROM TOWERS BUT BONDED TO TOWER WITH #2 STC AND CLAMP (OR CADWELD) UNLESS NOTED OTHERWISE.
4. ALL #2 AWG TCW MUST BE SOLID TINNED.

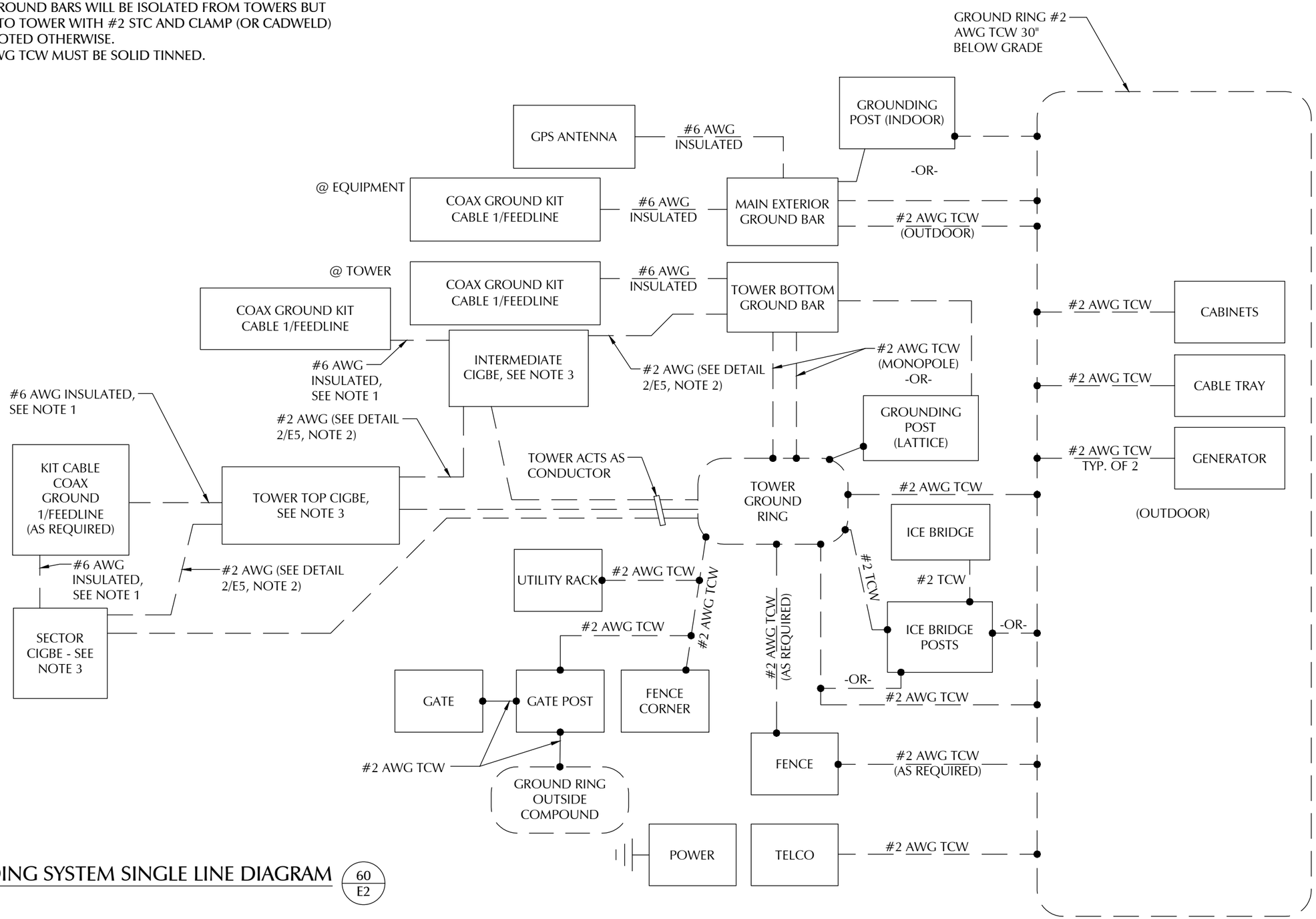

GROUNDING SYSTEM SINGLE LINE DIAGRAM

NTS

60 / E2

LESSEE

TeleCAD Wireless
1961 NORTHPOINT BLVD, SUITE 130
HIXSON, TN 37343
PH: 423-843-9500
FAX: 423-843-9509

THE INFORMATION CONTAINED IN THIS SET OF DOCUMENTS IS PROPRIETARY BY NATURE. ANY USE OR DISCLOSURE OTHER THAN THAT WHICH RELATES TO THE CLIENT IS STRICTLY PROHIBITED.

A&E PROJECT #:	20171560891
DRAWN BY:	JSJ
CHECKED BY:	DMB

REVISIONS

NO.	DATE	BY	DESCRIPTION
6	11/10/17	CAD	CONSTRUCTION ISSUE
5	10/30/17	CAD	PRELIMINARY REVIEW
4	10/23/17	CAD	PRELIMINARY REVIEW
3	09/22/17	CAD	PRELIMINARY REVIEW
2	08/11/17	JSJ	PRELIMINARY REVIEW

NORTH CAROLINA PROFESSIONAL SEAL NO. 032507 ENGINEER STEPHEN E. HUNT 11/10/17

PROJECT No. 20171560891

SITE NAME: BIG ECHO

SITE NUMBER: 443109

SITE ADDRESS: 137 DAVES ROAD MOORESBORO, NC 28114

DESIGN TYPE: RAWLAND

SHEET TITLE: GROUNDING SINGLE LINE

DRAWING NO. E9

REVISION: 0

11/10/2017 2:08:23 PM, coreyday

COUNTY OF CLEVELAND, NORTH CAROLINA

AGENDA ITEM SUMMARY

Case 18-08

Department:

Agenda Title: Case 18-08: Request to rezone property at 905 Cleveland Avenue from Restricted Residential to Residential

Agenda Summary:

Proposed Action:

ATTACHMENTS:

File Name	Description
18-08_Staff_Report_905_Cleveland_Avenue.pdf	Staff Report
18-08_Zoning_Map_905_Cleveland_Avenue.pdf	Zoning Map
18-08_Aerial_Map_905_Cleveland_Avenue.pdf	Aerial Map

STAFF REPORT

To: Town of Grover Council Date: April 5, 2018

From: Chris Martin, Senior Planner

Subject: Rezoning Case 18-08

Summary Statement: Dorothy Pruitt has applied to rezone parcel 6689, at 905 Cleveland Avenue from Restricted Residential to Residential.

Review: Parcel 6689, located at 905 Cleveland Avenue in Grover, is currently zoned Restricted Residential. The area surrounding this parcel is Residential to the immediate North, East and West and Restricted Residential to the immediate South. The Land Use Plan designates this area as Future Residential as well.

Landowners Jeffrey and Brenda Patzwald would like to place a new single-wide manufactured home on the property. The currently Restricted Residential Zoning does not allow this but rezoning to Residential would allow it. The surrounding area has a mixture of residential uses, including manufactured housing.

Per North Carolina General Statute 153A-341 the Council is required to craft a plan consistency statement giving explanation as to the Council's decision and how it relates to the land use plan utilizing one of the three below:

- A statement approving the proposed zoning amendment and describing its consistency with the Land Use Plan;
- A statement rejecting the proposed zoning amendment and describing its inconsistency with the Plan; or
- A statement approving the proposed amendment and declaring that this also amends the Plan, along with an explanation of the change in conditions to meet the development needs of the community that were taken into account in the zoning amendment.

Pros:

- Extension of the current residential zoning district
- In harmony with existing area

Cons:

- None

Fiscal Impact:

- None

Recommendations:

- Planning Board:

Case # 18-08 Re-Zoning for 905 Cleveland Avenue, RR to R
Zoning Map, Parcel #6689, 0.467 acres

General Business

Residential

Restricted Residential

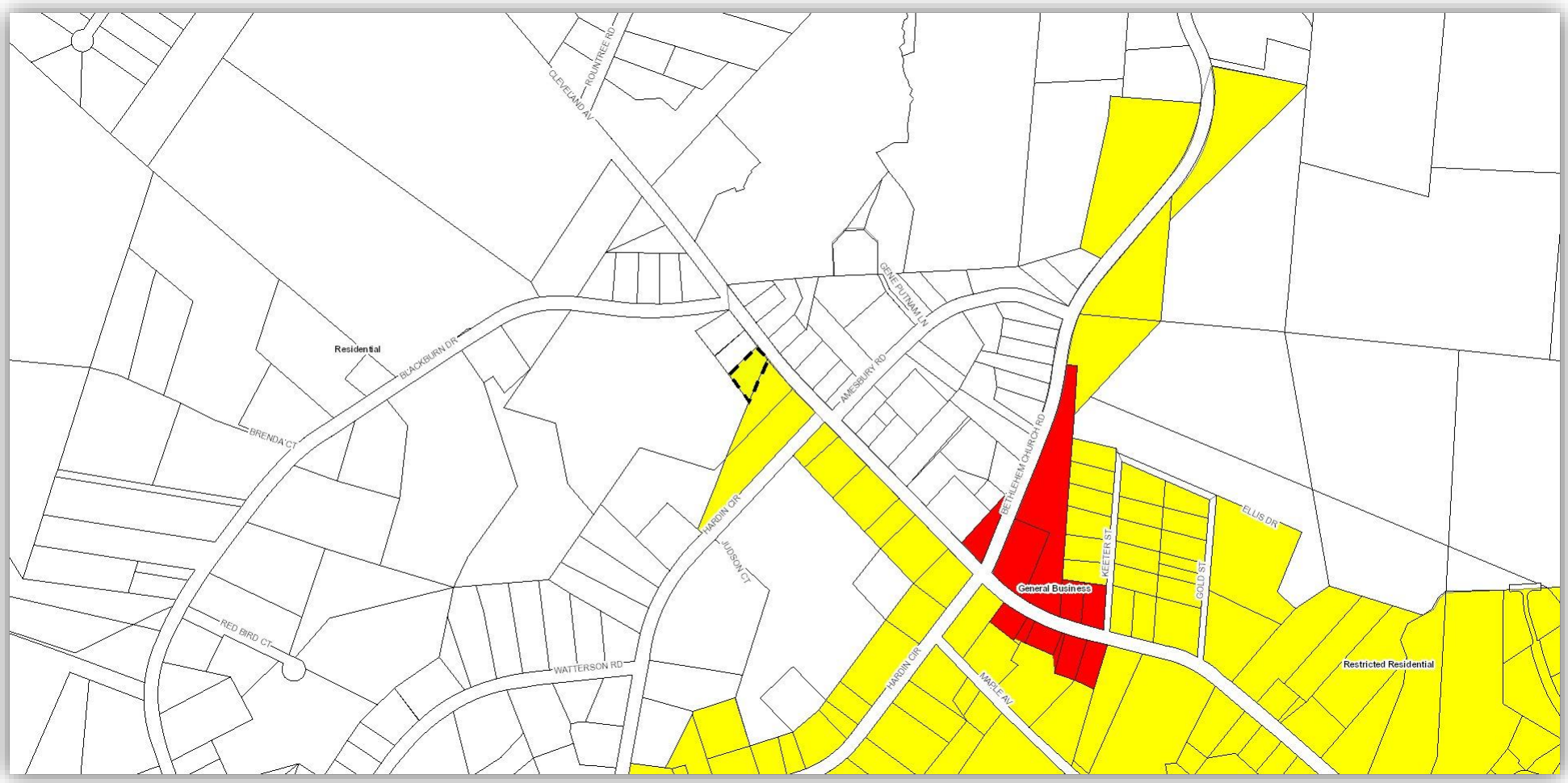

Case # 18-08 Re-Zoning for 905 Cleveland Avenue
Aerial Map, Parcel #6689 0.467 acres

COUNTY OF CLEVELAND, NORTH CAROLINA

AGENDA ITEM SUMMARY

Case 18-09

Department:

Agenda Title: Case 18-09: Request to rezone property at 3711 Lavista Drive from Residential to General Business

Agenda Summary:

Proposed Action:

ATTACHMENTS:

File Name	Description
18-09_Staff_Report_3711_Lavista_Drive.pdf	Staff Report
18-09_Zoning_Map_3711_Lavista_Drive.pdf	Zoning Map
18-09_Aerial_Map_3711_Lavista_Drive.pdf	Aerial Map
18-09_Future_Land_Use_Map_3711_Lavista_Drive.pdf	Land Use Map

STAFF REPORT

To: Board of Commissioners Date: April 10, 2018

From: Brian Epley, County Manager

Via: Chris Martin, Senior Planner

Subject: Rezoning Case 18-09

Summary Statement: Steve Bowen has applied to rezone parcels 31081 & 31082, at 3711 Lavista Drive from Residential to General Business.

Review: Parcels 31081 and 31082, located at 3711 Lavista Drive, just west of the City of Shelby along Highway 74, is currently zoned Restricted Residential. Mr. Bowen owns parcel 32750, directly west, for his automobile service business. Mr. Bowen wishes to rezone the two above mentioned parcels business so he can expand his existing business. The area surrounding this parcel is Residential to the immediate South with General Business and Manufactured Home Park zoned parcels to the north and west. The Land Use Plan designates this area as Future Commercial as well.

Per North Carolina General Statute 153A-341 the Council is required to craft a plan consistency statement giving explanation as to the Council's decision and how it relates to the land use plan utilizing one of the three below:

- A statement approving the proposed zoning amendment and describing its consistency with the Land Use Plan;
- A statement rejecting the proposed zoning amendment and describing its inconsistency with the Plan; or
- A statement approving the proposed amendment and declaring that this also amends the Plan, along with an explanation of the change in conditions to meet the development needs of the community that were taken into account in the zoning amendment.

Pros:

- In compliance with Land Use Plan
- Extension of already existing zoning district

Cons:

- None

Fiscal Impact:

- None

Recommendations:

- Planning Board: Planning Board will meet on Tuesday, April 24, 2018

Case # 18-09 Re-Zoning for 3711 Lavista Drive
Current Zoning Designation, Parcel # 31081&31082, R to GB

Manufactured Homes Residential General Business

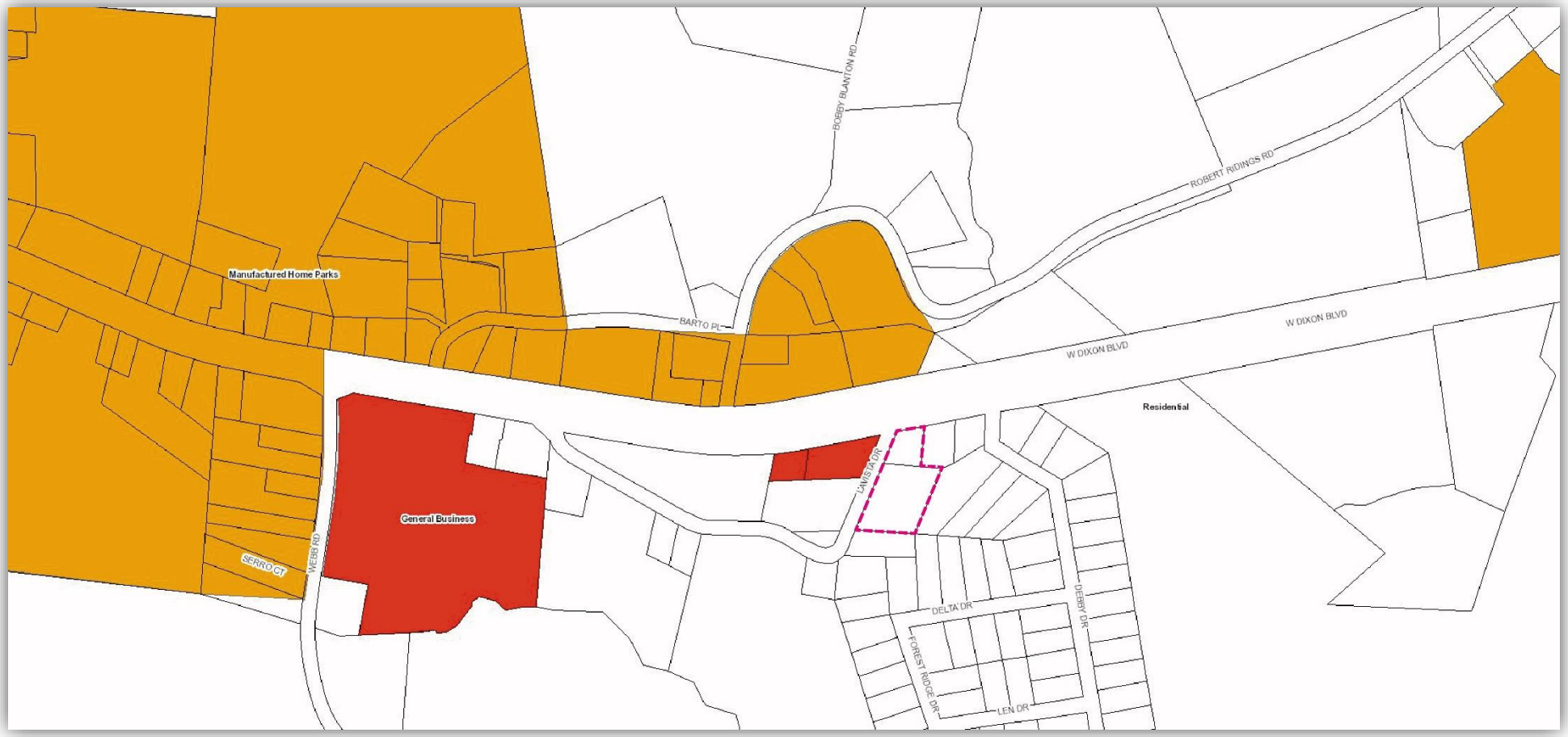

Case # 18-09 Re-Zoning for 3711 Lavista Drive
Aerial Image, Parcel # 31081&31082, R to GB

Case # 18-09 Re-Zoning for 3711 Lavista Drive
Future Land Use, Parcel # 31081&31082, R to GB

Industrial Residential Commercial

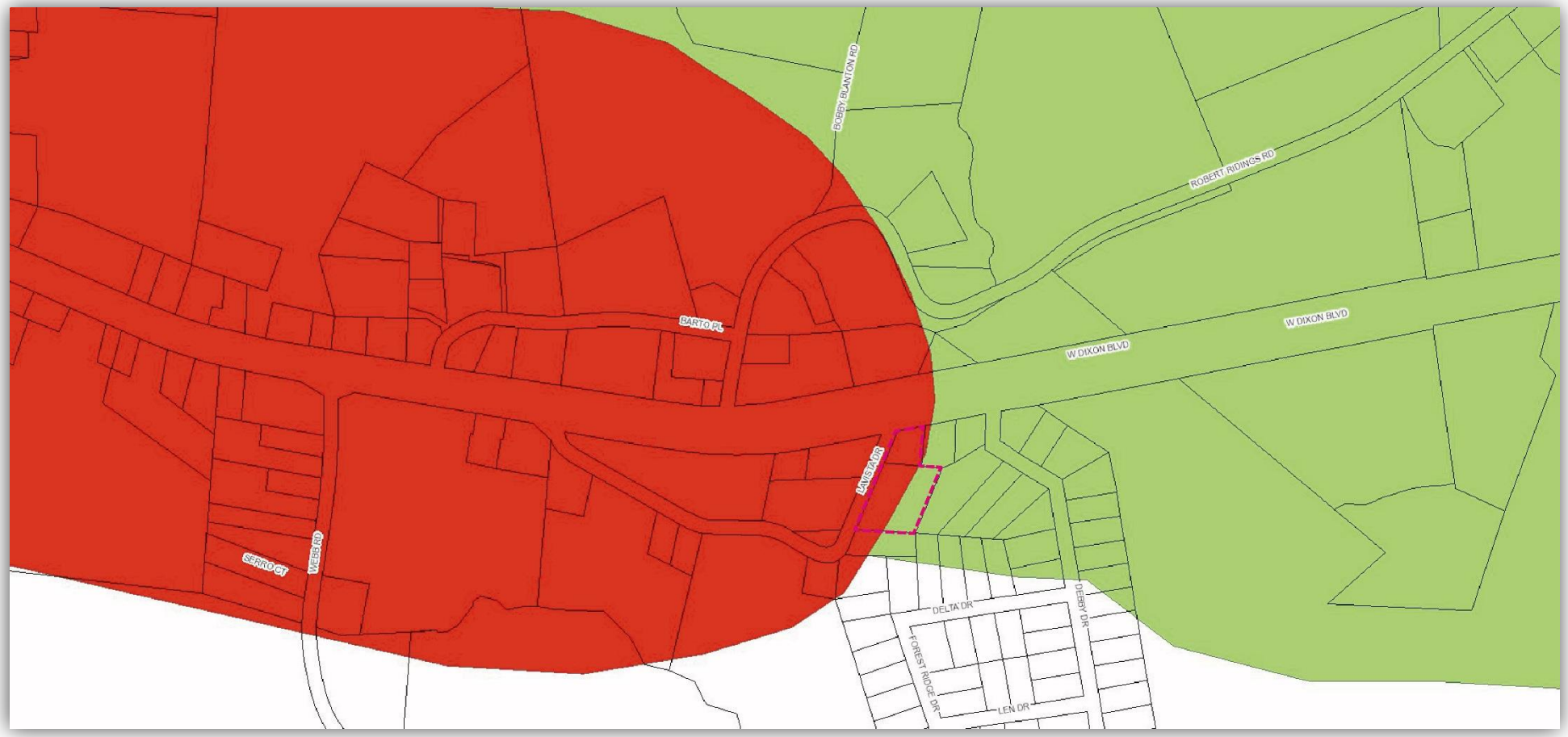

COUNTY OF CLEVELAND, NORTH CAROLINA

AGENDA ITEM SUMMARY

Boiling Springs Community Park Revitalization

Department:

Agenda Title: Boiling Springs Community Park Revitalization

Agenda Summary:

Proposed Action:

ATTACHMENTS:

File Name	Description
No Attachments Available	

COUNTY OF CLEVELAND, NORTH CAROLINA

AGENDA ITEM SUMMARY

Planning Board Class

Department:

Agenda Title: Discussion of May 1, 2018 School of Government Planning Board Class in Charlotte

Agenda Summary:

Proposed Action:

ATTACHMENTS:

File Name	Description
No Attachments Available	